1	DRAWINGS BILL OF MATERIALS ELECTRICAL PROCEDURE
2	TRANSFORMER DISTRIBUTION PANEL FUSED DISCONNECT
3	FLORESCENT LIGHTS EMERGENCY LIGHT SMOKE ALARM POWER CONNECTORS
4	VOLTMETER SELECTOR SWITCH HAWS EYEWASH
5	FREEMAN HATCH DIAMOND SEAGLAZE DOORS
6	AIR CONDITIONER FUME HOOD FREEZER & FRIDGE
7	FINAL TEST PLAN
8	

AVERY 600022

TANDEMLOC

INTERNATIONAL RELIEF
We are happy to support www.FREIGHTSHIPS.org

Register / Login

VERTICAL CLAMP CONNECTOR (VI-SO) (K08A00A-1GA)

The VISO Connector has a bolt-on base or it may be welded to a suitable platform. The VISO fits ISO 1161 Corner Fitting large aperture and incorporates a clamping action that removes any slack between the corner fitting and the body of the connector. Use whenever a slack free connection is preferred. Hot Dipped galvanized for rugged use

Product Photo

- **STRENGTH RATINGS:**
  Maximum allowable loads for one VI-SO
  44,000 Lbs. restraint against upward force
  50,000 Lbs. traverse shear
  HIGHER STRENGTHS AVAILABLE
- **Use** for a slack-free, clamp-down connection of ISO 668 type container or similar structure. Connector enters the large bottom aperture of the standard corner fitting (ISO 1161) & clamps down on the inside of the bottom wall.

  While this standard VI-SO is not designed for single wheels or lifting, products for these purposes are available.

  Use to tightly secure containers to structures such as special pallets, ships' deck, overhead beams, foundations, chassis or other containers.

  While this standard VI-SO is not designed for single wheels or lifting, products for these purposes are available.

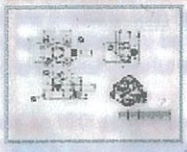

Login / register to activate:
TANDEMLOC_K08A00A-1GA.pdf
Type: PDF File
Size: 143 KB

Tandemloc's Credit Application Form
(Note: Credit Applications will only be processed with an accompanying purchase order)

- **Order Numbers:**

K08A00A-1GA: VISO Connector	PRODUCT INQUIRY
K08A00A-2GA: WITH PADS, Weight: 15.6 LBS	PRODUCT INQUIRY
K08A00A-3GA: WITH MOUNTING HARDWARE, Weight: 17 LBS	PRODUCT INQUIRY
K08A00A-4GA: WITH PADS AND MOUNTING HARDWARE, Weight: 17.1 LBS	PRODUCT INQUIRY

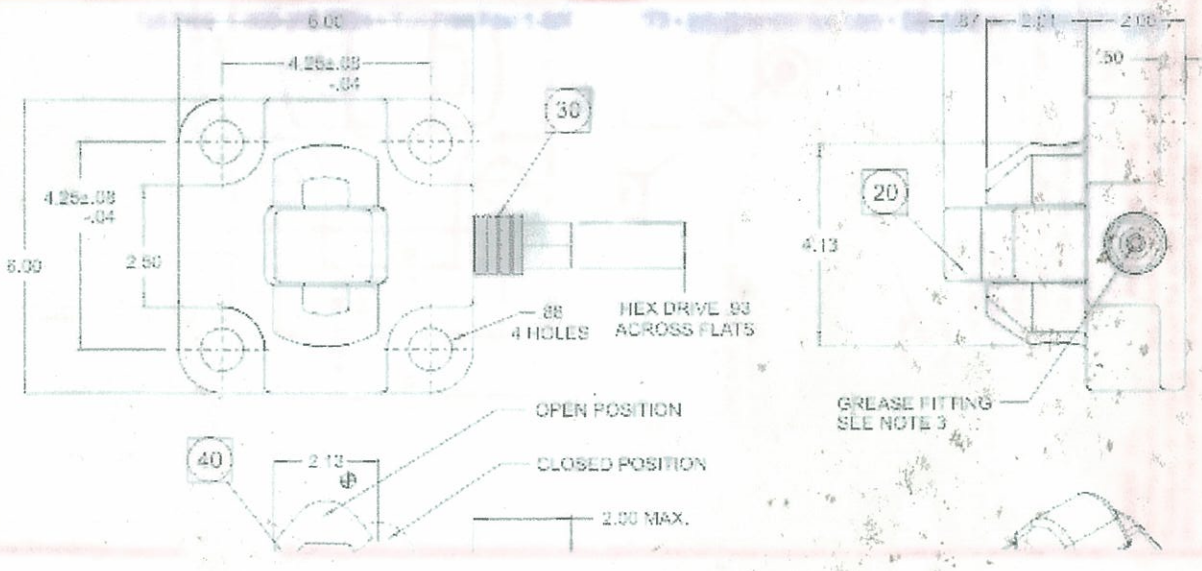

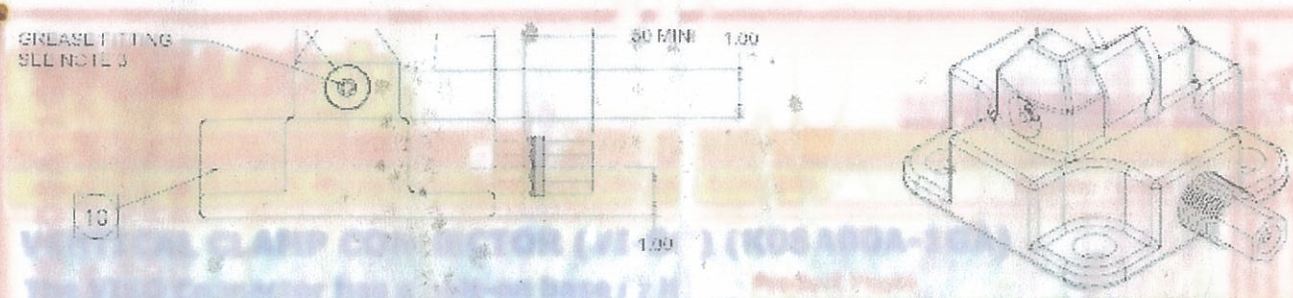

Available with rubber pads for cushioning. Mounting hardware available, too!

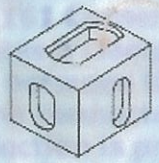

VI-SO grips the corner tightly, in contrast to other commonly used twist locking connectors which have approximately 1/4" of "play".

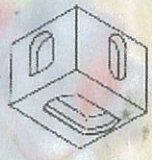

Use also to connect other items to a container such as antenna, air conditioners, davits or railings.

A. Use - for a slack-free, clamp-down connection of each corner of an ISO 668 type container such as a deck or other structure, lower the container so that the open connector enters the large bottom aperture of each ISO 1161 standard corner fitting. The clamp arm bears down on the inside of the bottom wall when the drive stud is screwed in.

B. Use cap screws and lock nuts to assemble the connector to a suitable receiving structure. Locate connectors per "male fitting instructions" on Tandemloc Data Sheet DF-72047-16 (Sheet 2) for standard sized structures. For non-standard sizes use the principles implied on this sheet to determine your location.

C. The VI-SO is to be bolted to the desired structure using four 3/4" SAE Grade 8 steel cap screws. Special flat head cap screws and locknuts are available with hex sockets on both ends. This permits the cap screw to be held from the threaded end while turning the lock nut (useful when the head end is not accessible).

D. To secure an ISO container or similar structure first open the connector fully by turning the drive stud counterclockwise until it is within (Sheet 1) dimension. Lower container so that the upward projecting portions of the connector enter the large apertures in the bases of the corner fittings. Turn the drive stud clockwise to secure.

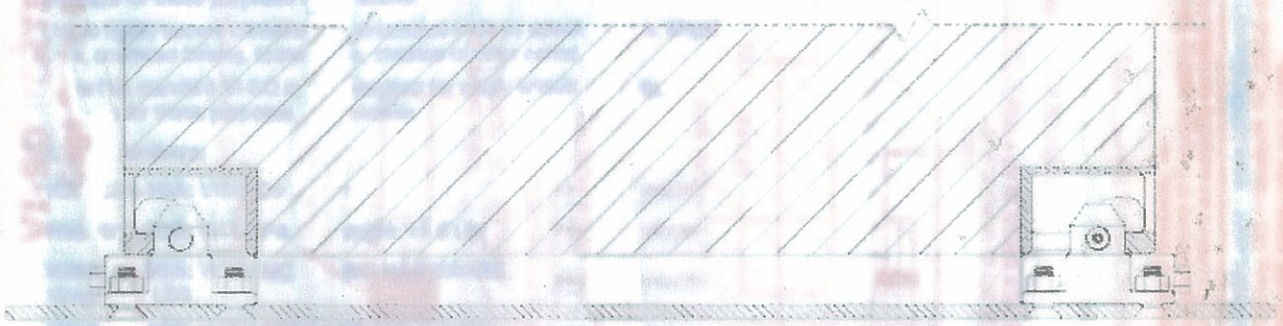

AT LEAST TWO OPPOSING VERTICAL CLAMPS ARE REQUIRED TO SECURE

Call Toll-Free: 1-800-258-7324 • Toll-Free Fax: 1-800-892-3273 • info@tandemloc.com • Site Map • Contact Us • Help

VI-SO VERTICAL CLAMP CONNECTOR (K08A00A-1GA)

Cage Code: 65059 | Drawing No: SK08A00A | Revision: - | Sheet: 1 of 2

SEE ELECTRONIC PARTS LIST FOR BILL OF MATERIALS
UNLESS OTHERWISE SPECIFIED, DIMENSIONS ARE IN INCHES
OLD PART NO. 9008 VCFC

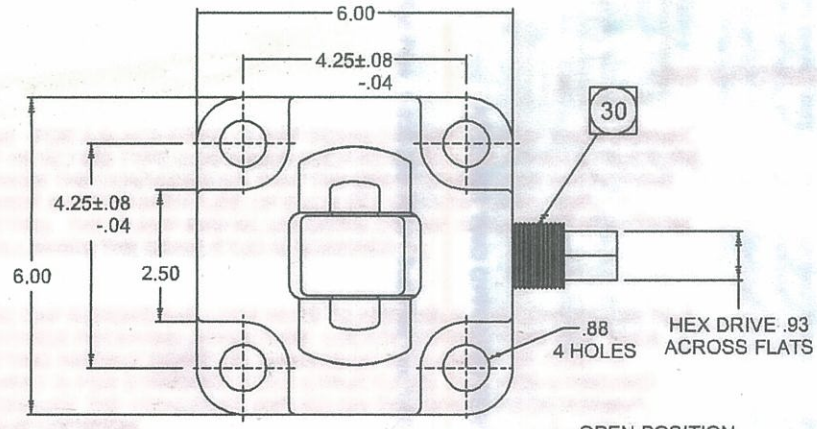

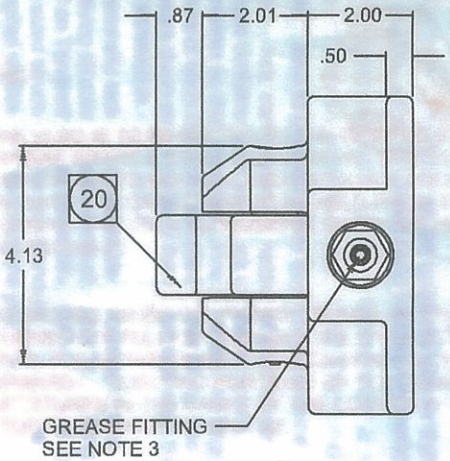

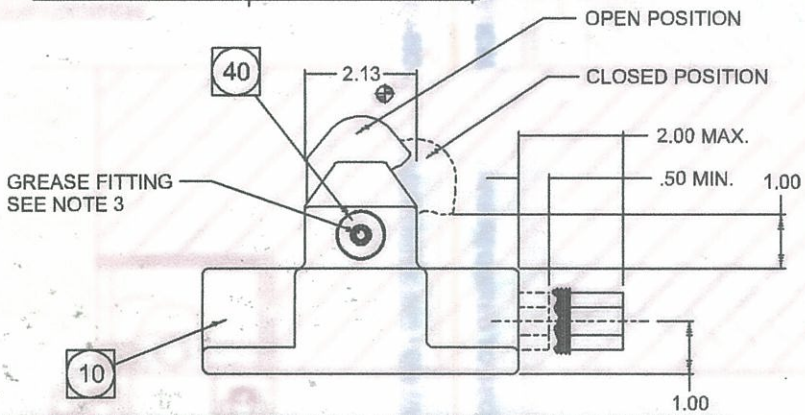

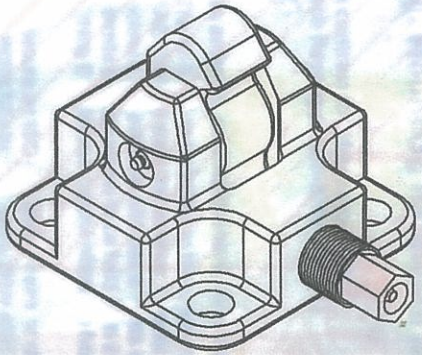

NOTES:

1. THE GRIP AND FORCE EXERTED BY THE CLAMP ARM (PIECE 20) IS VARIABLE BY ROTATING THE DRIVE STUD (PIECE 30). MAX LOAD ON THE HEX DRIVE IS 50 FT/LB
2. MAXIMUM ALLOWABLE LOAD FOR ONE VI-SO
   - 44,000 LBS RESTRAINT AGAINST UPWARD FORCE
   - 50,000 LBS TRANSVERSE SHEAR
3. TWO GREASE FITTINGS ALLOW FOR EASY LUBRICATION.
4. DIMENSIONS WITHOUT TOLERANCE ARE SUBJECT TO MANUFACTURING TOLERANCES.

PIECE NO.	QUANTITY	DESCRIPTION
10	1	BODY, MACHINED AND GALVANIZED
20	1	CLAMP ARM, GALVANIZED
30	1	DRIVE STUD, ZINC PLATED
40	1	HINGE PIN, ZINC PLATED

VI-SO VERTICAL CLAMP CONNECTOR (K08A00A-1GA)

Cage Code: 65059 | Drawing No: SK08A00A | Revision: - | Sheet: 2 of 2

SEE ELECTRONIC PARTS LIST FOR BILL OF MATERIALS
UNLESS OTHERWISE SPECIFIED, DIMENSIONS ARE IN INCHES
OLD PART NO. 9008 VCFC

USE INFORMATION:

A. USE - FOR A SLACK-FREE, CLAMP-DOWN CONNECTION OF EACH CORNER OF AN ISO 668 TYPE CONTAINER SUCH AS A DECK OR OTHER STRUCTURE, LOWER THE CONTAINER SO THAT THE OPEN CONNECTOR ENTERS THE LARGE BOTTOM APERTURE OF EACH ISO 1161 STANDARD CORNER FITTING. THE CLAMP ARM BEARS DOWN ON THE INSIDE OF THE BOTTOM WALL WHEN THE DRIVE STUD IS SCREWED IN.

B. USE CAP SCREWS AND LOCK NUTS TO ASSEMBLE THE CONNECTOR TO A SUITABLE RECEIVING STRUCTURE. LOCATE CONNECTORS PER "MALE FITTING INSTRUCTIONS" ON TANDEMLOC DATA SHEET DF-72047-16 (SHEET 2) FOR STANDARD SIZED STRUCTURES. FOR NON-STANDARD SIZES USE THE PRINCIPLES IMPLIED ON THIS SHEET TO DETERMINE YOUR LOCATION.

C. THE VI-SO IS TO BE BOLTED TO THE DESIRED STRUCTURE USING FOUR 3/4" SAE GRADE 8 STEEL CAP SCREWS. SPECIAL FLAT HEAD CAP SCREWS AND LOCKNUTS ARE AVAILABLE WITH HEX SOCKETS ON BOTH ENDS. THIS PERMITS THE CAP SCREW TO BE HELD FROM THE THREADED END WHILE TURNING THE LOCK NUT (USEFUL WHEN THE HEAD END IS NOT ACCESSABLE)

D. TO SECURE AN ISO CONTAINER OR SIMILAR STRUCTURE FIRST OPEN THE CONNECTOR FULLY BY TURNING THE DRIVE STUD COUNTERCLOCKWISE UNTIL IT IS WITHIN (SHEET 1) DIMENSION. LOWER CONTAINER SO THAT THE UPWARD PROJECTING PORTIONS OF THE CONNECTOR ENTER THE LARGE APERTURES IN THE BASES OF THE CORNER FITTINGS. TURN THE DRIVE STUD CLOCKWISE TO SECURE

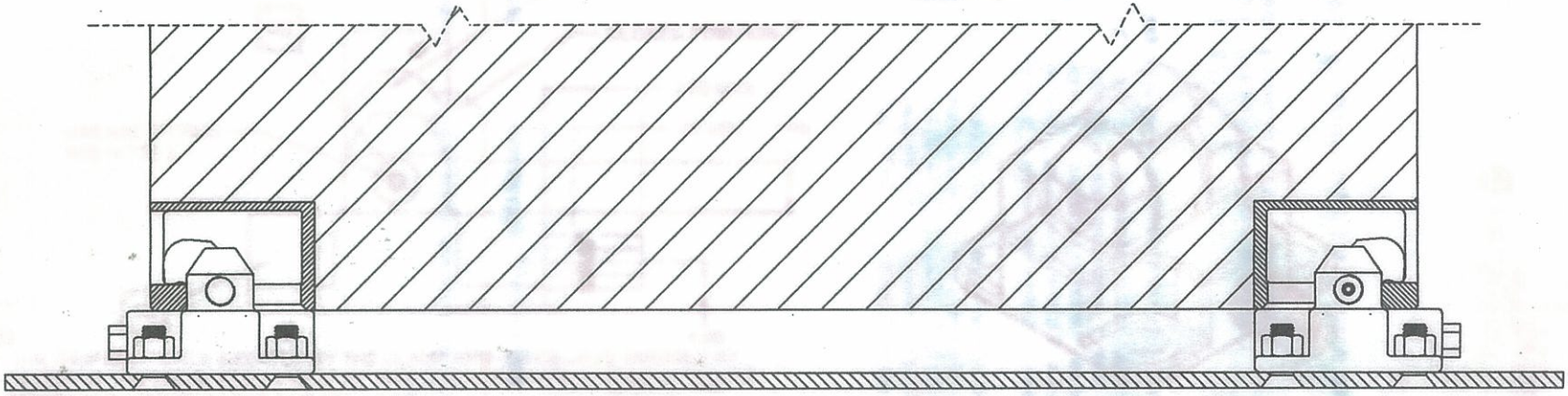

AT LEAST TWO OPPOSING VERTICAL CLAMPS ARE REQUIRED TO SECURE

CAUTION: Hand Tumble Wall (Wrong Hand)
This document and/or data sheet is provided for reference purposes only. Property of Tandemloc, Inc. Disclaimer: In reliance on the other information provided, Tandemloc, Inc. assumes no liability for any damages, including but not limited to, direct, indirect, special or consequential damages, arising out of the use of, or reliance on, the information provided in this document. Tandemloc, Inc. assumes no responsibility for any damages caused by unintended application.

REVISIONS				
ZONE	LTR	DESCRIPTION	DATE	APPROVED
		ISSUED FOR APPROVAL		
	A	UPDATED AS PER CUSTOMER	08 JAN 04	
	B	WINDOWS REMOVED	09 JAN 04	
	C	AS-BUILT	10 MAR 04	

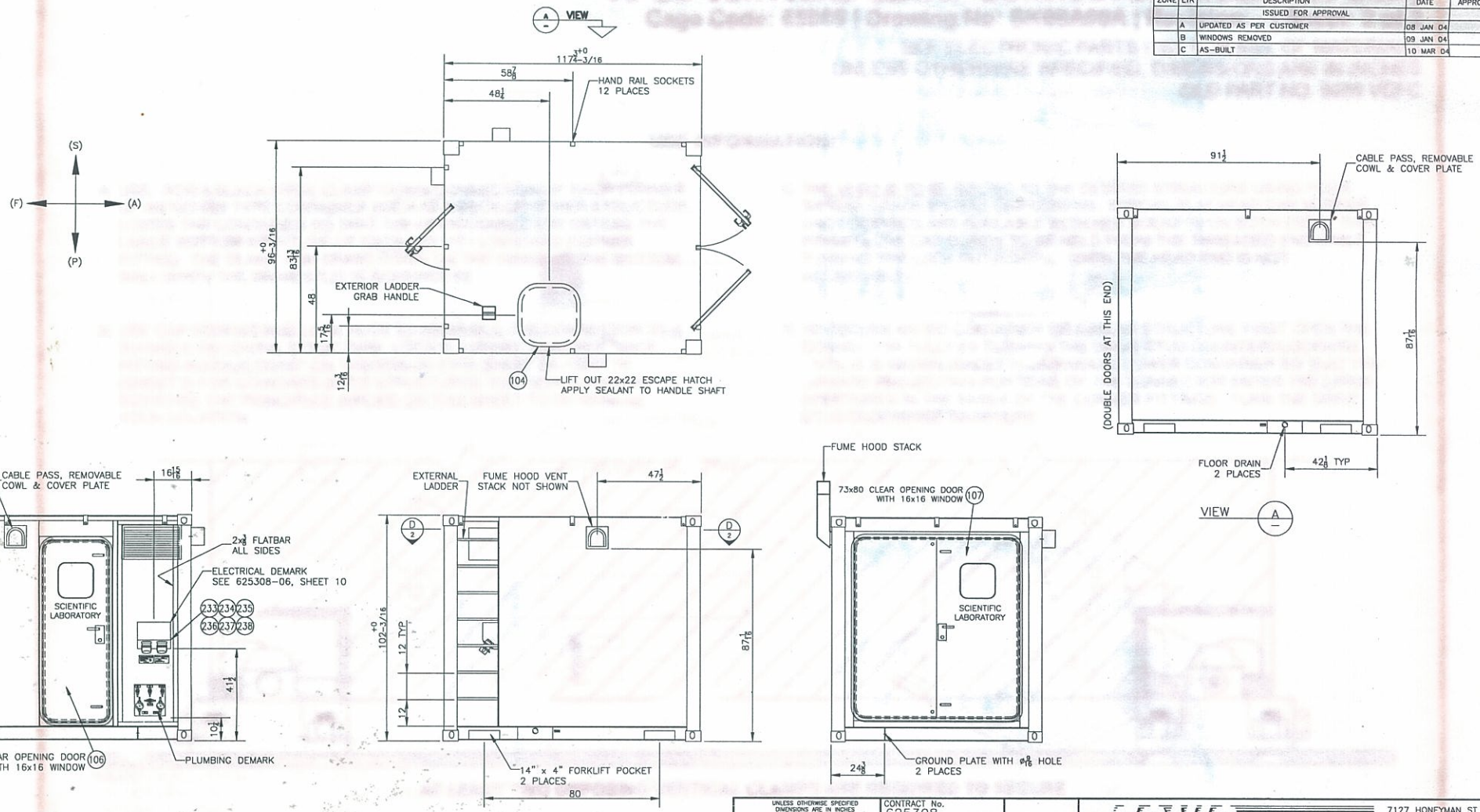

UNLESS OTHERWISE SPECIFIED DIMENSIONS ARE IN INCHES
TOLERANCES
FRACTIONAL ± 4°
DECIMAL ± .031"
ANGULAR ± 1.0°
DO NOT SCALE DRAWING

CONTRACT No. 625308		
DRAWN GUS	DATE 29 DEC 03	
CHECK		
DESIGN GUS	29 DEC 03	
DESIGN ACTIVITY		
CUSTOMER UNOLS		

SONIC
7127 HONEYMAN ST
DELTA B.C. V4G 1E2
PH- 604 946-6100
FX- 604 946-6967

TITLE
10' ALUMINUM ISOTOPE VAN
EXTERIOR VIEWS

SIZE	FSCM NO	DWG No	REV.
		625308-02	C
SCALE 1:40	RELEASE DATE	SHEET 1	

THIS IS A PROPRIETARY DESIGN OF SONIC ENCLOSURES LTD. MANUFACTURE, REPRODUCTION OR USE OF ANY ASSEMBLY, SUBASSEMBLY OR PART IS NOT PERMISSIBLE EXCEPT IF EXPRESSLY PRIOR AUTHORIZED IN WRITING BY SONIC ENCLOSURES LTD.

REVISIONS				
ZONE	LTR	DESCRIPTION	DATE	APPROVED
		ISSUED FOR APPROVAL		
	A	UPDATED AS PER CUSTOMER	08 JAN 04	
	B	WINDOWS REMOVED	09 JAN 04	
	C	AS-BUILT	10 MAR 04	

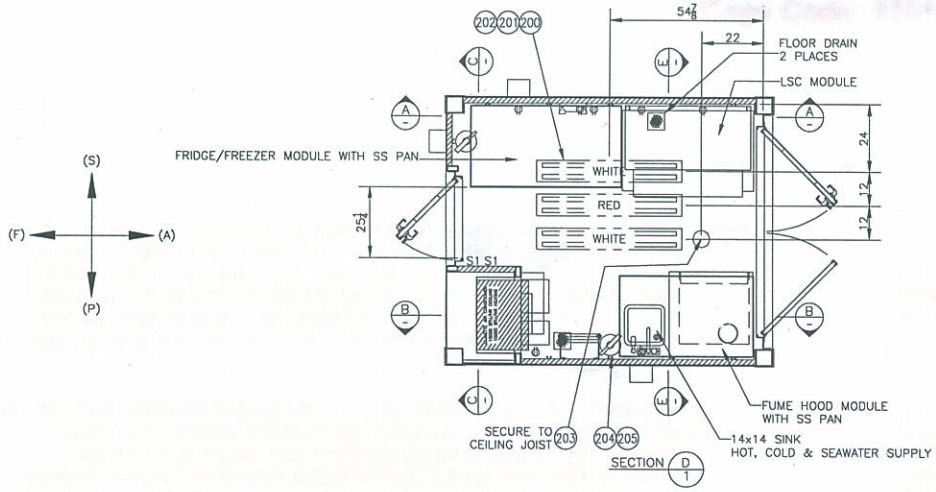

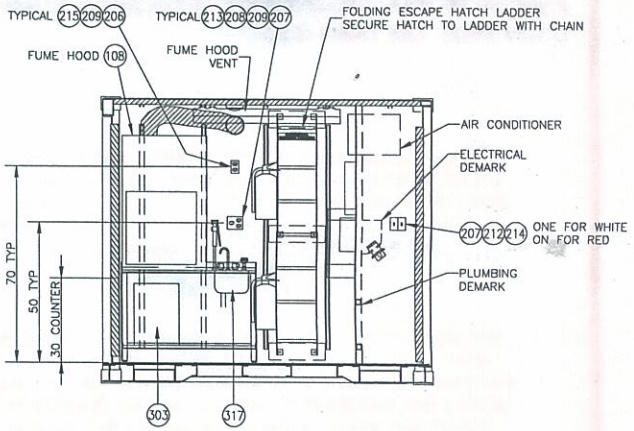

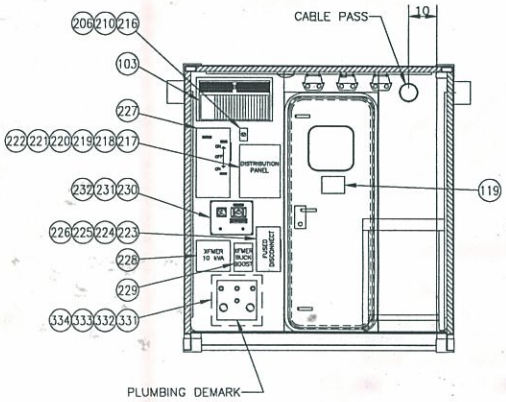

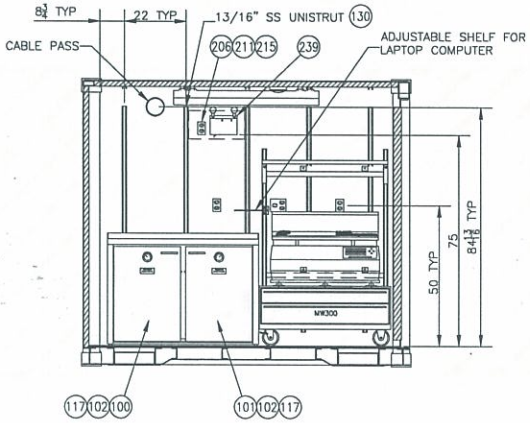

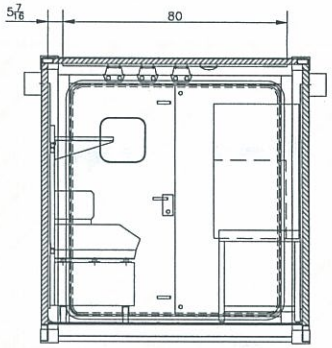

NOTES:-

1. ALL VERTICAL ELECTRICAL WIRING TO RECEPTACLES TO BE SURFACE MOUNTED USING 1/2" EMT.
2. ALL OTHER ELECTRICAL WIRING TO BE SURFACE MOUNTED USING 3/4" EMT.
3. ALL RECEPTACLES & SWITCHES TO BE MOUNTED DIRECTLY ON WALL STUDS UNLESS OTHERWISE SPECIFIED.
4. CONDUIT IS TO BE RUN ON THE WALL SURFACE AND NOT ON THE UNISTRUT.
5. MINIMUM WIRE SIZE IS TO BE #12AWG.
6. ALL CABLE/WIRE TO BE STRANDED, XLPE-90.

THIS IS A PROPRIETARY DESIGN OF SONIC ENCLOSURES LTD. MANUFACTURE, REPRODUCTION OR USE OF ANY ASSEMBLY, SUBASSEMBLY OR PART IS NOT PERMISSIBLE EXCEPT IF EXPRESSLY PRIOR AUTHORIZED IN WRITING BY SONIC ENCLOSURES LTD.

UNLESS OTHERWISE SPECIFIED DIMENSIONS ARE IN INCHES
TOLERANCES
FRACTIONAL ± 4°
DECIMAL ± .031"
ANGULAR ± 1.0°
DO NOT SCALE DRAWING

CONTRACT No. 625308		
DRAWN GUS	DATE 29 DEC 03	
CHECK		
DESIGN GUS	29 DEC 03	
DESIGN ACTIVITY		
CUSTOMER UNOLS		

SONIC
7127 HONEYMAN ST
DELTA B.C. V4G 1E2
PH- 604 946-6100
FX- 604 946-6967

TITLE
10' ALUMINUM ISOTOPE VAN
INTERIOR VIEWS

SIZE	FSCM NO	DWG No	REV.
		625308-02	C
SCALE 1:40	RELEASE DATE	SHEET 2	

REVISIONS				
ZONE	LTR	DESCRIPTION	DATE	APPROVED
		ISSUED FOR APPROVAL		
	A	UPDATED AS PER CUSTOMER	08 JAN 04	
	B	WINDOWS REMOVED	09 JAN 04	
	C	AS-BUILT	10 MAR 04	

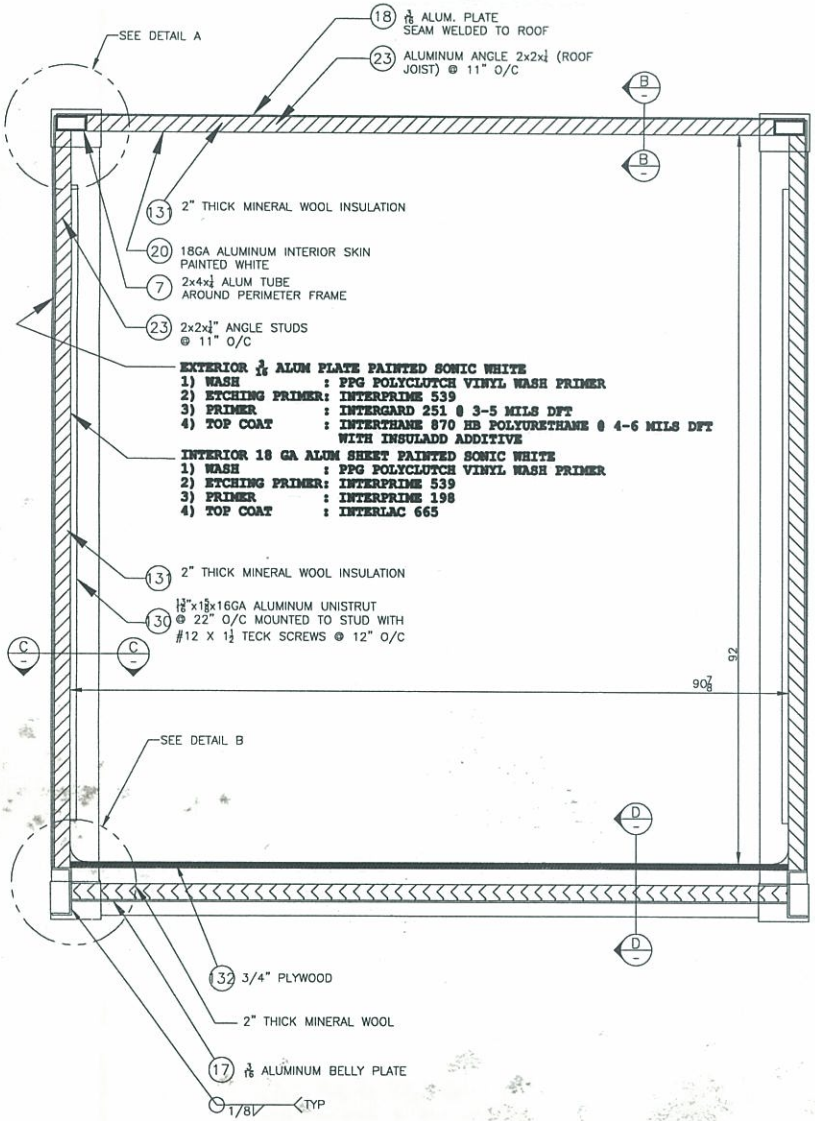

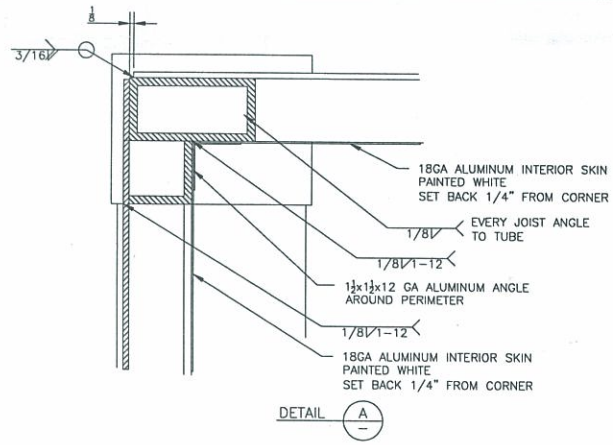

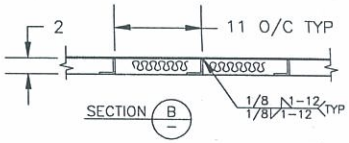

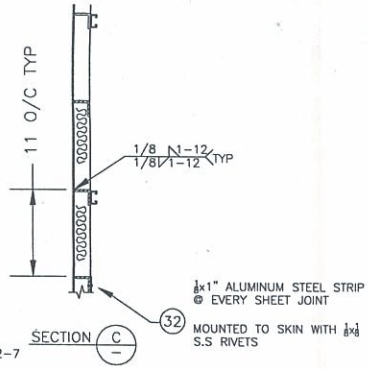

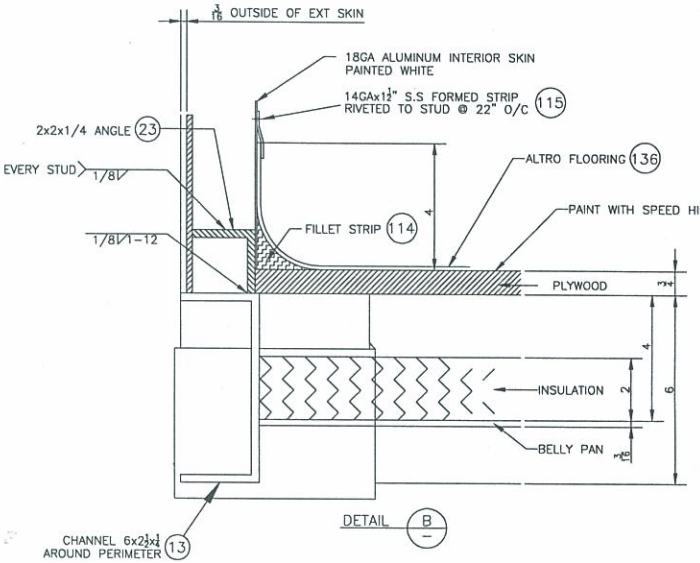

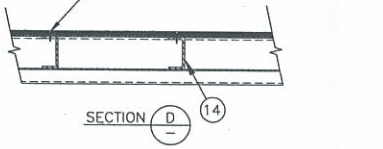

THIS IS A PROPRIETARY DESIGN OF SONIC ENCLOSURES LTD. MANUFACTURE, REPRODUCTION OR USE OF ANY ASSEMBLY, SUBASSEMBLY OR PART IS NOT PERMISSIBLE EXCEPT IF EXPRESSLY PRIOR AUTHORIZED IN WRITING BY SONIC ENCLOSURES LTD.

UNLESS OTHERWISE SPECIFIED DIMENSIONS ARE IN INCHES
TOLERANCES
FRACTIONAL ± 1/8"
DECIMAL ± .031"
ANGULAR ± 1.0°
DO NOT SCALE DRAWING

CONTRACT No. 625308		
DRAWN GUS	DATE 29 DEC 03	
CHECK		
DESIGN GUS	29 DEC 03	
DESIGN ACTIVITY		
CUSTOMER UNOLS		

SONIC
7127 HONEYMAN ST
DELTA B.C. V4G 1E2
PH- 604 946-6100
FX- 604 946-6967

TITLE
10' ALUMINUM ISOTOPE VAN
TYPICAL CROSS SECTION

SIZE	FSCM NO	DWG No	REV.
		625308-02	B
SCALE 1:16	RELEASE DATE	SHEET 3	

Project No:			Customer:		Description			
62530			UNOLS		SKIDAWAY			
Dwg Number	Sht	Item No.	Description	WHERE USED	SPECIFICATION OR PART	Qty	Purchase Size/Lgth	Units
				FAB BOM				
625308-07	1	1	Corner Casting, ISO, top right		AL / 76010-6TR	2		ea
625308-07	1	2	Corner Casting, ISO, top left		AL / 76010-6TL	2		ea
625308-07	1	3	Corner Casting, ISO, bottom right		AL / 76010-6BR	2		ea
625308-07	1	4	Corner Casting, ISO, bottom left		AL / 76010-6BL	2		ea
625308-02		5						
625308-07	1	6	Tube, 6 x 6 x 1/4	Corner posts	AL / 6063-T5	2		20'
625308-09	1	7	Tube, 2 x 4 x 1/4	Rails / AC corners	AL / 6063-T5	4		20'
625308-07	1	8	Tube, 4 x 6 x 1/4	Double door top rail	AL / 6063-T5	7		ft
625308-06	3	9	Tube, 1 x 1 x 1/8, round corner	Ladder		20		ft
625308-06	11	10	Tube, 2 x 2 x 1/4	and rail pockets / Plumbi	AL / 6061-T6	10		ft
		11						
		12						
625308-03	1	13	Channel, C6 x 2-1/2 x 1/4	Perimeter channel	AL / 6063-T5	4		20'
625308-03	1	14	Channel, C4 x 2 x 1/4	Cross channel	AL / 6061-T6	2		20'
		15						
		16						
625308-03	1	17	Sheet, 4 x 8 x 3/16	Belly pan / AC Int wall	AL / 5052-H32	3		ea
625308-02	10, 11 & 1	18	Sheet, 20 x 8 x 3/16	Skins	AL / 5086-H32	2		ea
625308-06	6	19	Sheet, 16" x 16" x 3/16	Plumbing demark	SS / 316	1		ea
625308-02	3	20	Sheet, 4 x 8 x 18ga	Interior skins	AL / 5052-H32	9		ea
625308-06	2	21	Sheet, 6" x 20" x 14 ga	Cowling body		2		ea
625308-06	18 & 19	22	Sheet, 4 x 8 x 18ga	Module pans	SS / 304L	1		ea
625308-02	9, 12 & 14	23	Angle, 2 x 2 x 1/4	Studs / Modules	AL / 6061-T6	18		20'
625308-03	1	24	Angle, 2 x 3 x 1/4	Studs / Base frame	AL / 6061-T6	3		20'
625308-06	8	25	Angle, 3 x 3 x 3/8	Double door frame	AL / 6061-T6	1		20'
625308-06	8	26	Angle, 3 x 4 x 3/8	Double door frame	AL / 6061-T6	1		20'
625308-06	21 & 22	27	Angle, 3 x 4 x 1/4	Counter modules	AL / 6061-T6	1		20'
		28						
		29						
625308-06	3	30	Flatbar, 2 x 1/4	Interior ladder	AL / 6063-T5 / 6061-T6	2		10'
625308-02	1	31	Flatbar, 2 x 3/8	/C frame / Freezer Modul	AL / 6063-T5 / 6061-T6	3		10'
625308-02	3	32	Flatbar, 1 x 1/8	Finishing strips		9		10'
625308-06	18 & 19	33	Rod, 1/4 dia	Module pans	SS / 304L	15		ft
				FINISH BOM				
625308-02	2	100	Under counter freezer 23 7/8"x24 3/8"dx34"h		White / Sub-zero / 249FF/I	1		ea
625308-02	2	101	Under counter refridgerator 23 7/8"x24 3/8"dx34"h		White / Sub-zero / 249RP	1		ea
625308-02	2	102	Dial Thermometer, Vapor Filled, 2 1/2" (-40° C -+15° C), (-40° F - +		Cooper / 7112-01-03	2		ea
625308-02	1	103	A/C, 10,000 btu heating &cooling, without sleeve		Climette / CH1026TB	1		ea
625308-02	1	104	Escape Hatch 22x22 square "K" style Aluminum w/Aluminum deck		Freeman / 2423-0002	1		ea
625308-02	3	105	Waffer head screw, #12 x 2", self drilling, zinc plated	Plywood		75		ea
625308-02	1	106	Door, single, as per drawing 625308-06, sheet 4		Diamond Seaglaze / 250 Series	1		ea
625308-02	1	107	Door, double, as per drawing 625308-06, sheet 5		Diamond Seaglaze / 250 Series	1		ea
625308-02	2	108	Fume hood, fiberglass 30, with motor, 120V		from stock / Labconco / 30140-05	1		ea
625308-02	23	109	Lista cabinet housing, mid width, blue		Lista / MW300 NL BB	1		ea
625308-06	23	110	Lista cabinet base & castors, 4" for above		Lista / CB-MW4B	1		ea
625308-06	23	111	Lista drawer, mid width for above, 100mm		Lista / MW100F IDL	1		ea
625308-06	23	112	Lista drawer, mid width for above, 200mm		Lista / MW200F IDL	1		ea
625308-06	16	113	Not used			-		ea
625308-02	3	114	Fillet strip, rubber	Fillet for altro		25		ft
625308-02	3	115	Formed finishing strips for Altro	Finishing strips		23		ft

625308-02	2	116	Clip angle	Modules	Unistrut / P1747	10		ea
625308-02	2	117	Locking hasp, SS	Freezer door	Faurcher / 699-0185	2		
625308-06	17	118	Birdscreen, 1/2 x 1/2 galvanized, 25" x 14.5"	Air conditioner		1		
625308-02	2	119	Sonic / Tony Thomas nameplate			1		ea
625308-02	-	120	Labels, black letters on aluminum plate, drawing 625308-06, sheet 14			-		ea
625308-02	-	121	Labels, black letters on white lamacoid, drawing 625308-06, sheet 7			-		ea
625308-02	-	122	Labels, white letters on red lamacoid, drawing 625308-06, sheet 13			-		ea
625308-02	-	123	Labels, black letters on adhesive decal, drawing 625308-06, sheet 12			-		ea
625308-06	2	124	Pipe, 6" sch 40, aluminum			14		in
625308-06	3	125	Cable pass gasket, rubber	Water jet cut		3		ea
625308-06	3	126	Cable pass cover plate, aluminum	Water jet cut		3		ea
625308-06	2	127	Cable pass flange, aluminum	Water jet cut		3		ea
625308-06	2	128	Cable pass 'horseshoe' flange, aluminum	Water jet cut		2		ea
625308-06	21	129	Unistrut, 1-5/8 x 1-5/8, aluminum	Modules	Superstrut / A1400AL10	5		10'
625308-02	2	130	Unistrut, 1-5/8 x 13/16, aluminum	Walls / Ceiling	Superstrut / B1400AL10	14		10'
625308-02	3	131	Insulation, 2" mineral wool			330		sq. ft
625308-02	3	132	Plywood, 4 x 8 x 3/4, good one side	Floor / Modules		4		ea
625308-02	21	133	Stem glides, threaded, 1-1/4	Modules	Hepard Hardware Products	8		ea
625308-06	23	134	Vibration Control Mount, Neoprene Dome Style, 125 lb	LSC Module	McMaster Carr / 6423K412	5		ea
625308-06	23	135	Unistrut shelf bracket, 20" long	LSC Module	Superstrut / S236HDG	2		ea
625308-02	3	136	Altro flooring, comercial grade		VM 20153 fog	80		sq. ft.
625308-06	25	137	Rubber sheet, 3/16" x 11" x 8"	Gooseneck		2		ea
				ELEC BOM				
625308-02	2	200	Fluorescent light, 2 Tube ,4 foot , Damp location		Lithonia / DM 240	3		ea
625308-02	2	201	Fluorescent tube, white			2		ea
625308-02	2	202	Fluorescent tube, red			1		ea
625308-02	2	203	Smoke detector		Firex / 428C	1		ea
625308-02	2	204	Fire extinguisher		Viking Fire / 10# ABC	1		ea
625308-02	2	205	Fire extinguisher		Viking Fire / 15# CO2	1		ea
625308-02	2	206	Wall box, 1 gang, weatherproof		Red Dot / S100CN	5		ea
625308-02	2	207	Wall box, 2 gang, weatherproof		Red Dot / S400CN	3		ea
625308-02	2	208	Receptacle, single, 120/240V, 20A		Arrow hart / 5759	2		ea
625308-02	2	209	Receptacle, duplex, 120V, 20A, GFI		Leviton / 8599-CPI	5		ea
625308-02	2	210	Receptacle, single, 250V, 20A, NEMA 6-20R	Air Conditioner	Leviton / 5842-I	1		ea
625308-02	2	211	Receptacle, duplex, 120V, 15A	Emerg light	Leviton / 5262-I	1		ea
625308-02	2	212	Switch, one way, 120V, 15A		Leviton / 1451-I	2		ea
625308-02	2	213	Cover plate, 2 gang, Decora cut-out & single 1.406 hole, SS		Leviton / Custom	2		ea
625308-02	2	214	Cover plate, 2 gang, double switch, SS		Commander / CI 97532	1		ea
625308-02	2	215	Cover plate, 1 gang, duplex 120V receptacle, SS		T&B / 97401	4		ea
625308-02	2	216	Cover plate, 1 gang, single 250V receptacle, SS	Air Conditioner		1		ea
625308-02	2	217	Distribution Panel 120/240V 125A,16cct copper bus		Cutler hammer / CPM116	1		ea
625308-02	2	218	Main breaker, 40A 2 Pole		Cutler hammer / CPM116	1		ea
625308-02	2	219	Breaker, 20A, 240V 2 pole, GFI	240V Receptacles	Cutler hammer / GFCB220	2		ea
625308-02	2	220	Breaker, 20A 1 pole	120V Receptacles	Cutler hammer / BR120	9		ea
625308-02	2	221	Breaker, 15A 1 pole	Lights	Cutler hammer / BR115	1		ea
625308-02	2	222	Breaker, 20A 2 pole	Air Conditioner	Cutler hammer / BR220	1		ea
625308-02	2	223	Fused disconnect switch,60A, 600V 3 pole		Cutler hammer / 1HD262	1		ea
625308-02	2	224	Fuse, 30A for fused disconnect		Cutler Hammer /	3		ea
625308-02	2	225	Fuse, 40A for fused disconnect		Cutler Hammer /	3		ea
625308-02	2	226	Fuse, 60A for fused disconnect		Cutler Hammer /	3		ea
625308-02	2	227	Transfer switch, double throw, non fused disconnect 240V 2Pole 60A		Cutler hammer / 1DT222NF	1		ea
625308-02	2	228	XFMR, 10kva ,480/240V -120/240V copper, 1 Pole Nema 1		Marcus /	1		ea
625308-02	2	229	XFMR, buckboost 1.5kva 208V - 32V, copper 1 Pole Nema 1		Marcus / BE1500P208S32	1		ea
625308-02	2	230	Selector switch, 3 Position ,60A contact 600v rated		K lockner-Moeller / T5B-3-8630-	1		ea
625308-02	2	231	Buss fuse holder(hpd) 6a		Limtron / KTK-50	2		ea
625308-02	2	232	Voltmeter, Crompton 3 1/2" 0-500V		Crompton / 016-02VA-SFSF	1		ea
625308-02	2	233	Appliance inlet, 60A 2 Wire+Grnd 480v 3 pole		Hubbell / HBL360B7W	1		ea
625308-02	2	234	Cord connector for item 79		Hubbell / HBL360C7W	1		ea
625308-02	2	235	Appliance inlet, 60A 3 Wire+Grnd 480v 3 pole		Hubbell / HBL460B12W	1		ea

625308-02	2	236	Cord connector for item 85		Hubbell / HBL460C12W	1		
625308-02	2	237	Cable, type SOW, 2 cond plud grd, #6 AWG (3 cond total)		Wesburne /	50		
625308-02	2	238	Cable, type SOW, 3 cond plud grd, #6 AWG (4 cond total)		Wesburne /	50		
625308-02	2	239	Emergency 2 head light		Lithonia / M636 120 CS CSA	1		ea
				PLUMBING BOM				
6252308-06	15	300	Eyewash station, haws spray hosew/wall hook	Inlet	Haws / 8910B	1		ea
6252308-06	15	301	10" frst wal hyd w/vac breaker 135 893	Inlet	135 883	1		ea
6252308-06	15	302	Faucet, hot & cold, cambridge lab	Inlet	W6720	1		ea
6252308-06	15	303	Hot water Tank 10 Gal	Inlet		1		ea
6252308-06	15	304	Ball valve,3/4" FIP threaded	Inlet	425-059	5		ea
6252308-06	15	305	Hose,1/2" white marine water 5' long, female both ends	Inlet	A2407050x5-20	2		ea
6252308-06	15	306	Hose,1/2" black rubber 5' long, female both ends	Inlet	121-899	1		ea
6252308-06	15	307	Hose braided, 3/8" comp to 1/2" fip 20" long	Inlet	118-743	2		ea
6252308-06	15	308	Adapter, 3/4"M-hose to 3/4" mip, brass	Inlet	121-838	4		ea
6252308-06	15	309	Riser, 3/4" mip 3" long pvc	Inlet	117-511	3		ea
6252308-06	15	310	Tee, 3/4" fip threaded white pvc	Inlet	413-096	2		ea
6252308-06	15	311	Elbow,90 deg.3/4" fip threaded white pvc	Inlet	413-094	1		ea
6252308-06	15	312	Adapter, 3/4" mip to 1/2" fip white pvc	Inlet	166-728	1		ea
6252308-06	15	313	Adapter, 1/2" mip to 3/8" comp brass SC-394	Inlet	103-437	2		ea
6252308-06	15	314	Adapter, 3/4" fip to 1/2" fip brass A-865	Inlet	415-190	2		ea
6252308-06	15	315	Elbow, 90 degree brass 3/4" f-hose to 3/4" m-hose	Inlet		1		ea
6252308-06	16	316	Adapter, 3/4 female hose tp 3/4 male pipe, brass	Inlet		1		ea
6252308-06	16	317	Sink, polyethylene, 14.5 x 14.5 x 8	Drainage	McMaster - Carr / 3071K12	1		ea
6252308-06	16	318	Coupling, 1 1/2" fip to 1 1/2" f-abs pipe, C5803	Drainage	116-148	2		ea
6252308-06	16	319	ABS pipe, 1 1/2"	Drainage		4"		ea
6252308-06	16	320	P-Trap, 1 1/2" Abs with cleanout	Drainage	114-130	1		ea
6252308-06	16	321	Adapter, 1 1/2" m-abs to 1 1/2" ,fip, 5803-2	Drainage	116-158	1		ea
6252308-06	16	322	Combo hose nipple, yellow, 1 1/2"	Drainage	N10 150NY	3		ea
6252308-06	16	323	Hose, 1 1/2" corrugated white marine	Drainage	NL4980-150	5'		ea
6252308-06	16	324	Ball Valve,1-1/2 FIP threaded	Drainage	149-871	1		ea
6252308-06	16	325	Hose clamp 1"-2" , screw type	Drainage		6		ea
6252308-06	16	326	Diverter valve, sea-lec 1 1/2"	Drainage		1		ea
6252308-06	16	327	Reducer, 1 1/2" m-slip to 3/4" fip	Drainage	158-543	1		ea
6252308-06	16	328	Adapter, 3/4" m-hose to 3/4" mip brass	Drainage	121-838	1		ea
6252308-06	6	329	Pipe nipple, 1-1/2 NPT x 3" long	Plumbing demark		2		ea
6252308-06	6	330	Pipe nipple, 3/4 NPT x 3" long	Plumbing demark		4		ea
6252308-02	2	331	Polyproylene cam lock part a female npt adapter	Plumbing demark	N42 150PP	2		ea
6252308-02	2	332	Polypropylene cam lock part a female npt adapter	Plumbing demark	N42 75PP	4		ea
6252308-02	2	333	Polypropylene part dc dust cap for #36	Plumbing demark	N48 150PP	2		ea
6252308-02	2	334	Polypropylene part dc dust cap for #37	Plumbing demark	N48 75PP	4		
				PAINT BOM				
			One 10ft Van = Exterior = 400 sq ft Interior = 300 sq ft					
			Interprime 539	Exterior		3		gal
			Intergard 251	Exterior		3		gal
			Interthane 870	Exterior		3		gal
			Insuladd, I gallon kit	Exterior		3		gal
			Interprime 539	Interior		2		gal
			Interprime 198	Interior		2		gal
			Interlac 665	Interior		2		gal
				Belly / Forklift pockets		1/2		gal
				Floor / Modules				gal

VAN ELECTRICAL PROCEEDURE
3-Phase – Variable Voltage

Connection to "Shore" Power or 208V "Ship" Power:

1. Plug female end of power cable into van outlet marked "208V Ship/Shore" power.
2. Ensure main breaker and individual breakers in distribution panel are in 'off' position.
3. Set the transfer switch in the van to the "Shore" position.
4. Supply suitable male plug on end of van power cable and plug into supply circuit.
5. Energize circuit. Verify incoming voltage as 208-240 V.
6. Energize main and individual breakers in distribution panel. Verify correct operation of lights, HVAC, GFCI receptacles.
7. Set the emergency light switch in the "Normal" mode and verify operation.

Connection to 240 or 480 "Ship" Power:

1. Plug female end of van power cable into outlet marked "Ship Power".
2. ENSURE CIRCUIT IS NOT ENERGIZED and install the appropriate fuses in the fused disconnect:
   480 V = 30 A
   240 V = 40 A
   208 V = 60 A
3. Set the voltage selector switch in the van to the appropriate incoming voltage.
4. Supply suitable male plug on end of van power cable and plug into supply circuit
5. Ensure main breaker and individual breakers in distribution panel are in 'off' position.
6. Energize circuit. Verify incoming voltage matches selector switch.
7. Close the disconnect cover and switch "ON."
8. Set the transfer switch in the van to the "Ship" position.
9. Energize main and individual breakers in distribution panel. Verify the correct operation of lights, HVAC, GFCI receptacles.
10. Set Emergency Light switch in the "Normal" mode and verify operation.

Disconnecting:

1. Put the emergency light switch in the "Off" position.
2. Turn off all circuit breakers in the distribution panel including the main breaker.
3. Turn off the power source.
4. Unplug and remove male plug from the cable as required. Place the cover over the van-mounted receptacle.

2

MARCUS

WHO WE ARE
PRODUCT LINE
CUSTOM
WHY COPPER?
DOWNLOAD SOFTWARE
CONTACT US

TECHNICAL SPECIFICATIONS

Choosing the right transformer
Transformer selection guide
Technical specs

MARCUS ADVANCED WATT+PLUS™ TECHNOLOGY

Maximum efficiency, lowest losses, trouble-free performance, longer life

COPPER WINDINGS MAKE THE DIFFERENCE.

Our coils are wound with 100% pure electrolytic high conductivity copper for long, trouble-free transformer life

MORE POWER AT LESS COST.

Marcus transformers reduce electricity bills, meaning a faster payback.

Advantages of Marcus Watt+Plus™ Technology

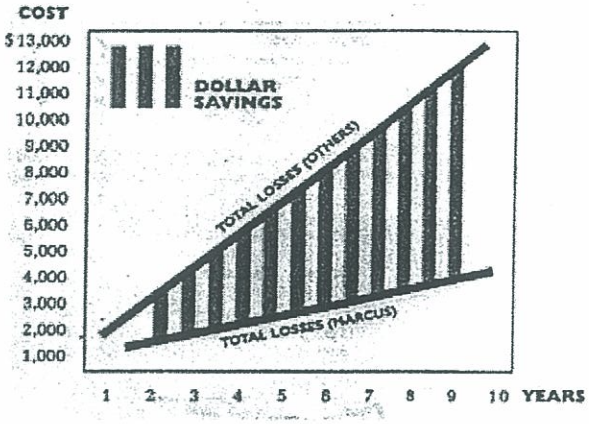

Graph data based on popular 45 kVA size

Costs based on .07¢ per KW / h

Comparison is between Marcus WATT+PLUS copper-wound transformer and conventional unit made of copper (if available)

Our unique wound core construction vs. conventional core.

The unique oval shape of Marcus wound core construction ensures that flow of magnetic flux is carried in direction of cold-rolled grain-oriented steel for minimal core loss.

A conventional transformer uses stacked lamination core assembly. 90°

square corners contribute to high core losses.

Easily accessible terminal board

Voltages are clearly shown to facilitate trouble-free connecting of line and load cables. All coil leads are directly brazed to terminal board studs to prevent heating, loosening.

Designed for cooler running.
Marcus distribution transformers are manufactured with heatproof Class 220°C materials only and designed to operate well below the maximum allowable temperature rise of 150°C.

More effective heat transfer.
To provide effective heat transfer, all our core and coil assemblies are double dipped in solventless, non-hygroscopic resin and baked thoroughly.

Quieter operation.
Anti-vibration isolators between the element and enclosure reduce vibration transfer to the surrounding structure, ensuring quieter operation.

Top

THE ADVANTAGE OF MARCUS WATT+PLUS™ TECHNOLOGY

Marcus WATT+PLUS™ technology means superior performance, maximum efficiency and lowest losses with all types of load - under all conditions.

We use the T-T connection for our three phase distribution transformers to derive the inherent benefits of single phase construction: high short-circuit strength, rugged physical integrity and superior reliability. These characteristics are normally available only on pole-mounted utility-grade, oil-filled transformers where every watt lost and every hour of downtime is critical.

ENERGY EFFICIENCY
Through the use of 100% copper windings, liberal designs and wound cores, all Marcus general purpose transformers have full load efficiencies above 97.5%. Low magnetizing currents averaging 1% of rated amperage mean that more power is available to handle useful customer load. Because of their efficient design, our transformers comply

with the CSA-802-94 standard for maximum losses.

ANGULAR RELATIONSHIPS
Characteristics of Marcus transformers with the T-T connection include
· 30° phase displacement between primary and secondary

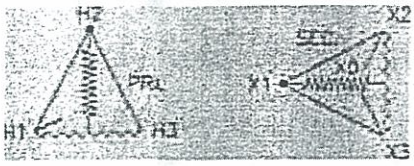

· 120° phase angular relationship between the line voltages and between the line currents.

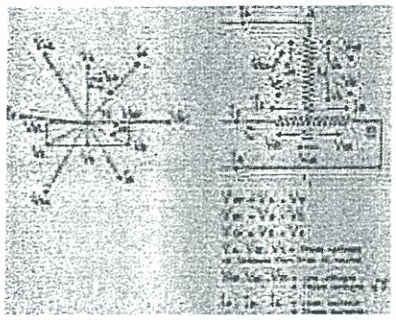

VOLTAGE REGULATION
Interlacing of windings on both coils for better coupling results in superior regulation with a maximum of 2.5% voltage drop at 1.0 power factor. This means higher peak loads are possible before minimum low voltage limitations are reached, allowing required voltages to be applied to critical equipment at greater distances.

BALANCED VOLTAGES
Even under the most severely unbalanced load conditions, a Marcus transformer with its 'stiff' internal neutral will not shift, ensuring that phase voltages are the same to within .2%.

HARMONIC CANCELLATION
Here we show K-Factor rated transformers for various non-linear loads.

Thanks to our unique design configuration, even Marcus standard distribution transformers offer significant advantages over other standard designs. This will be especially evident where there are changes and additions to existing installations affecting the percentage of non-linear component.

E-mail us for request

In the T-T connected transformers by Marcus, the triplen

harmonics are cancelled in the magnetic circuit and do not flow in the primary windings as in competitive designs. This results in a 14% reduction in copper losses, less heat and extended transformer life.

Top

HOME - PRODUCTS - CUSTOM - COPPER

INSTALLATION AND OPERATING INSTRUCTIONS

In order to obtain years of trouble-free service from your MARCUS TRANSFORMER, follow the simple instructions given below:

LOCATION in dry type transformers, air circulation through the windings is essential in the dissipation of the heat resulting from the transformer losses. It is thus evident that to insure long service, this transformer should be located indoors in a location that is reasonably dry and cool and free from excessive dust, oil vapors and acid fumes. Important: Always mount transformer so that the openings in the case are at the top and bottom, thus assuring maximum natural draft. Keep floor mounted units at least six inches from wall.

When the transformer is first turned on, a loud hum may be heard for an instant. This is a normal condition, the intensity of which is governed primarily by the point of the A.C. wave at which the transformer is turned on. This will diminish after a few cycles.

GENERAL: Because the iron loss in a transformer is the same at no load as it is at full load, the core will heat up even while the transformer is not carrying a load and is just floating on the line. This transformer is constructed with heat-proof materials and can therefore operate at a higher temperature rise than an ordinary transformer built with cotton, paper and enamel insulated conductors.

SURGE PROTECTION: All dry type transformers inherently have a lower basic impulse level (BIL) that liquid filled units. If the installation is made in an area where the transformer or the lines are exposed to voltage surges due to lightning, switching, etc., arresters should be installed as close as possible to the transformer terminals. The use of type RM lightning arresters of proper voltage rating is recommended.

SOUND LEVEL: All transformers have an inherent sound level. Alternating magnetic flux is the factor which causes the emanation of sound. Generally speaking, these vibrations have a pitch of twice the applied frequency. The larger transformers emit a greater volume of sound than the smaller ones. The actual noise level of the transformers, as tested in the factory, is not necessarily the noise level that will be evident on the job site. Very often, sound is amplified by a poor choice of the installation site. For instance, a close proximity to bare concrete walls or sheet metal results in a "sounding board" effect.

FOR MINIMUN SOUND LEVEL ON JOB SITE, OBSERVE FOLLOWING INSTALLATION PRECAUTIONS:

1. Avoid installation near a sound-reflecting surface
2. Avoid installation under stairs or in narrow hallways.
3. If possible, choose location where sound would be least objectionable.
4. Try to avoid tile, masonry, brick, or steel walls as installation sites. If this cannot be avoided, be sure to use an acoustic-absorbing material between transformer and sound-reflecting surface.
5. Avoid mechanical coupling between transformer and building structure.
6. Avoid mounting on walls, ceilings, or floors of relatively light mass.
7. Avoid mounting surfaces that are not even.
8. Avoid the use of rigid conduit or bus connections. These may transmit vibrations through leads to building structure.
9. Weight of mounting area relative to the area of the transformer should be greater than the weight of the transformer to minimize vibration.
10. The use of a vault, in itself, is no protection against sound emanation. The structural design of the vault, and conduit and duct connections, must be considered.

THE OBSERVANCE OF THESE INSTALLATION PRECAUTIONS WILL ALLOW THE FULL REALIZATION OF THE LOW DECIBEL LEVEL FOR WHICH MARCUS TRANSFORMERS ARE DESIGNED

MARCUS TRANSFORMERS CONFORM TO THE STANDARD OF C.S.A. and U.L.

TRANSFORMATEUR MARCUS DU CANADA LTÉE
MARCUS
MARCUS TRANSFORMER OF CANADA LTD.

999 College Street, Suite 26
Montreal (Qc) H4C 2S3
Tel: (514) 935-3543
Fax: (514) 935-6592
E-mail: info@marcustransformers.com

MARCUS TRANSFORMER of CANADA, Ltd.

Area Code 514
Telephone: 935-3543
Fax: 935-6592

999 COLLEGE STREET
MONTREAL QUEBEC

CONNECTION DIAGRAM

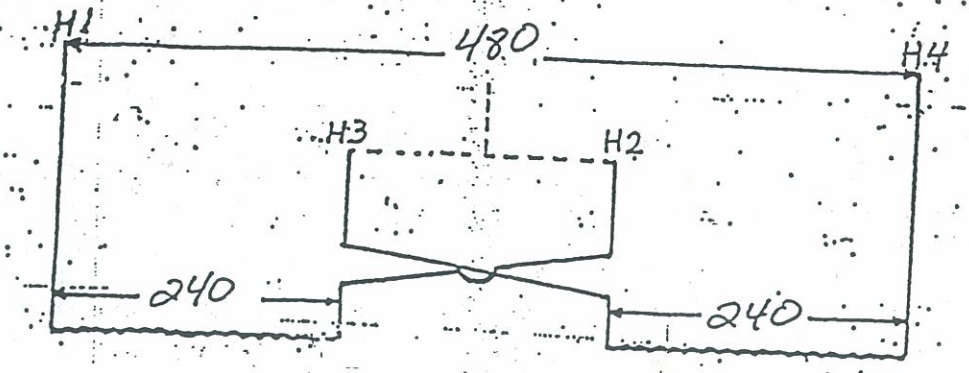

240 V., 2 WIRE CONNECT H1 & H3
H2 & H4

240/480 V., 3 WIRE CONNECT H2 & H3 TOGETHER FOR NEUTRAL.

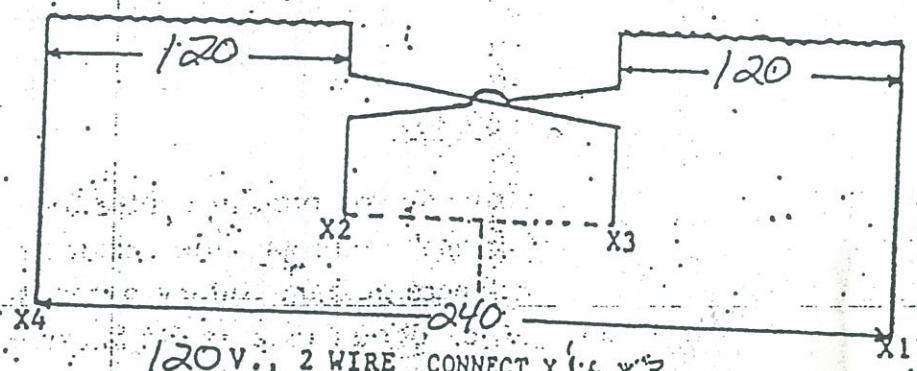

120 V., 2 WIRE CONNECT X1 & X3
X2 & X4

120/240 V., 3 WIRE CONNECT X2 & X3 TOGETHER FOR NEUTRAL.

KVA 10 60 CYCLES 1 PHASE

PRI. 240/480 VOLTS SEC. 120/240 VOLTS

SER. NO. 1020-701 DATE

SP 112

GENERAL PURPOSE DRY-TYPE TRANSFORMERS

SINGLE PHASE

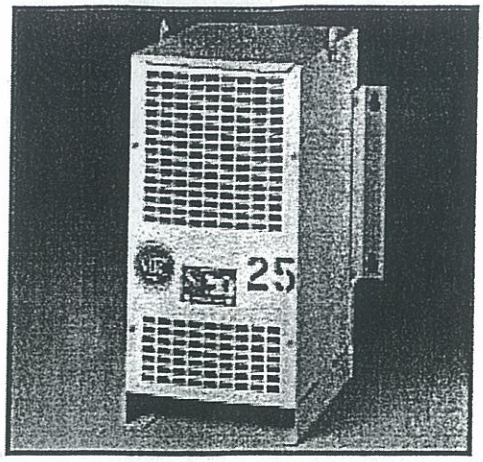

SELECTION CHARTS

600V PRIMARY, 120/240V SECONDARY

Class 220° C, 150° C Rise, 60 Hz

KVA	CATALOG NUMBER	DIMENSIONS (INCHES/MM) HEIGHT		WIDTH		DEPTH		FIG.	WEIGHT LBS	KG	MTG STYLE	KNOCKOUTS INCHES	MM	STD TAPS
3	MS 3A2	11	279	12	305	11	279	1	50	23	WALL	1-1 1/8	25-28	A
5	MS 5A2	11	279	12	305	11	279	1	60	27	WALL	1-1 1/8	25-28	A
7.5	MS 7.5A2	11	279	12	305	11	279	1	78	35	WALL	1-1 1/8	25-28	A
10	MS 10A2	11	279	12	305	11	279	1	90	41	WALL	1-1 1/8	25-28	A
15	MS 15A2	21	533	13.5	343	13	330	2	130	59	WALL	1-1 1/8	25-28	B
25	MS 25A2	29	736	14	355	17	432	3	200	90	WALL/FLR	1-1 1/8	25-28	B
37.5	MS 37.5A2	29	736	14	355	17	432	3	250	112	WALL/FLR	1-1 1/8	25-28	B
50	MS 50A2	29	736	14	355	17	432	3	300	135	FLOOR	1-1 1/8	25-28	B
75	MS 75A2	37	940	16.5	419	19	482	3	525	238	FLOOR	N.A.		B
100	MS 100A2	37	940	16.5	419	19	482	3	620	281	FLOOR	N.A.		B
150	MS 150A2	43	1092	18	457	21	533	3	905	410	FLOOR	N.A.		B
200	MS 200A2	50	1270	19	483	29	737	3	1050	476	FLOOR	N.A.		B
250	MS 250A2	50	1270	19	483	29	737	3	1145	519	FLOOR	N.A.		B
333	MS 333A2	52	1320	20	508	34	864	3	1645	746	FLOOR	N.A.		B

480V PRIMARY, 120/240V SECONDARY

Class 220° C, 150° C Rise, 60 Hz

KVA	CATALOG NUMBER	DIMENSIONS (INCHES/MM) HEIGHT		WIDTH		DEPTH		FIG.	WEIGHT LBS	KG	MTG STYLE	KNOCKOUTS INCHES	MM	STD TAPS
3	MS 3B2	11	279	12	305	11	279	1	50	23	WALL	1-1 1/8	25-28	A
5	MS 5B2	11	279	12	305	11	279	1	60	27	WALL	1-1 1/8	25-28	A
7.5	MS 7.5B2	11	279	12	305	11	279	1	78	35	WALL	1-1 1/8	25-28	A
10	MS 10B2	11	279	12	305	11	279	1	90	41	WALL	1-1 1/8	25-28	A
15	MS 15B2	21	533	13.5	343	13	330	2	130	59	WALL	1-1 1/8	25-28	D
25	MS 25B2	29	736	14	355	17	432	3	200	90	WALL/FLR	1-1 1/8	25-28	D
37.5	MS 37.5B2	29	736	14	355	17	432	3	250	112	WALL/FLR	1-1 1/8	25-28	D
50	MS 50B2	29	736	14	355	17	432	3	300	135	FLOOR	1-1 1/8	25-28	D
75	MS 75B2	37	940	16.5	419	19	482	3	525	238	FLOOR	N.A.		D
100	MS 100B2	37	940	16.5	419	19	482	3	620	281	FLOOR	N.A.		D
150	MS 150B2	43	1092	18	457	21	533	3	905	410	FLOOR	N.A.		D
200	MS 200B2	50	1270	19	483	29	737	3	1050	476	FLOOR	N.A.		D
250	MS 250B2	50	1270	19	483	29	737	3	1145	519	FLOOR	N.A.		D
333	MS 333B2	52	1320	20	508	34	864	3	1645	746	FLOOR	N.A.		D

SINGLE PHASE TYPICAL WIRING DIAGRAM

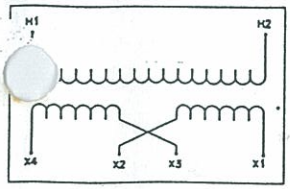

A. No taps
B. 575/600/625
C. 570/585/600/615/630 (Available)
D. 440/460/480
E. 440/460/480/500 (Available)
F. 456/468/480/492/504 (Available)

FIG. 1 WM

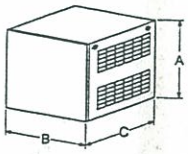

FIG. 2 TWM

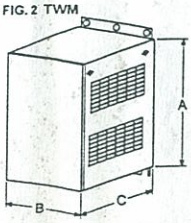

FIG. 3 WF

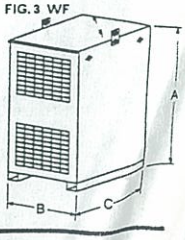

TRANSFORMATEUR MARCUS DU CANADA LTÉE
MARCUS
MARCUS TRANSFORMER OF CANADA LTD.

999 du Collège
Montréal (Qc) H4C 2S3
Cornwall (Ont.)
Tél: (514) 935-3543
Fax: (514) 935-6592

WARRANTY

Marcus Transformer of Canada Ltd. warrants that products of its manufacture shall be free from defects in workmanship or material under normal use or service provided that the transformer has not been subjected to incorrect voltage, frequency, overload, improper ventilation or improper use. For a period of one year from date of shipment, defective equipment will be repaired or replaced, free of charge, when returned F.O.B. factory of the Company. The Warranty is lieu of other warranties, expressed or implied, by the Company or its representatives and the said Warranty is also in lieu of legal Warranty or obligations or Warranty imposed by any law. The Company's liability is limited strictly to repair or replacement of the Company's products and no responsibility will be assumed for any consequential damages whatsoever and whether the same be contractual or delictual.

GARANTIE

Transformateur Marcus du Canada Ltée garantie son produit contre tout défaut de matériel et de main-d'oeuvre, à l'usage normal. Cette garantie exclut les cas où le transformateur aura été soumis à une fréquence où à un voltage excessif, où il aura été surchargé, où la ventilation sera incorrecte et où il en aura été fait quel qu'usage inapproprié que ce soit. Pour une période d'un an à partir de la date d'expédition, l'équipement défectueux sera remplacé ou réparé gratuitement lorsque retourné F-à-B notre usine. Cette Garantie tient lieu de toute garantie, implicite ou explicite, par la compagnie ou par ses représentants et ladite Garantie tient aussi lieu de Garantie légale ou d'obligations ou de Garantie imposée par quelque loi. La responsabilité de la compagnie est limitée strictement à la réparation ou au remplacement des produits de la compagnie et aucune responsabilité ne sera assumée pour quelques dommages conséquents quelqu'ils soient, qu'ils soient contractuels ou délictuels.

FRONT VIEW

SIDE VIEW

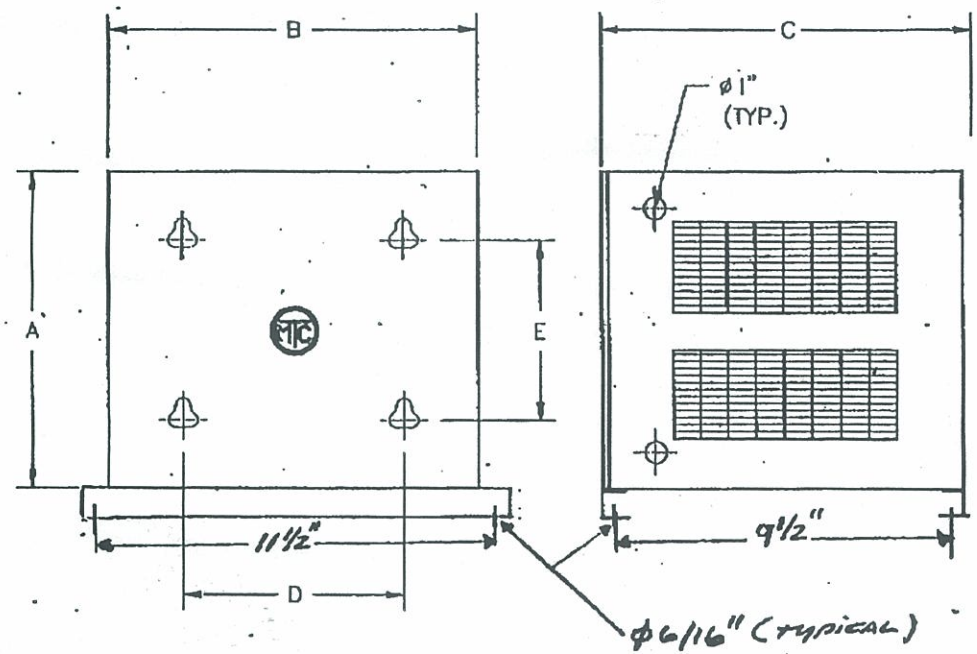

c/w - FLOOR MOUNTING CHANNELS

CSA CERTIFIED-ASA 61 GRAY

KVA	A	B	C	D	E
10	11"	12"	11"		

TRANSFORMATEURS
MARCUS
TRANSFORMER CO. INC

EFFICIENCY

100% LOAD:
75% LOAD:
50% LOAD:

NO-LOAD LOSSES:
TOTAL LOSSES:

STYLE:	TYPE:	INSUL.CLASS:
CEMA I	W	220

K.V.A.	P.H.	HZ.	NET WT.
10	1	60	110 LB

H.T. 480
H.V. 1±5% tap
B.T. 120/240
L.V.

TEMP.RISE	BIL	CONNECTION
150°C	10	ADDITIVE POLARITY

%Z= 4.8
SERIAL:

HI-POT TEST: 4000 V H.V. TO L.V. TO GROUND

TITRE/TITLE:

DRAWN BY: L.C.
CHECKED BY: L.N.
APPROVED BY:
JOB No.:
SCALE: NOT TO SCALE

marcus39

Type BR Loadcentres

Product Description
Loadcentres feature factory installed main lugs or main breakers. Cutler-Hammer also supplies a full line of branch circuit breakers and accessories.

Product Application
Designed for the protection and distribution of single and multi-dwelling residential and light commercial loads to 120/240 volts AC, such as lighting, heating, appliance and small motor branch circuits.

All Main Breaker Combination Loadcentres are CSA listed for use as service entrance equipment.

Ratings
Single phase, 3 wire, 120/240 volts AC and 3 phase, 4 wire, 120/208 volts AC. Mains through 400 amperes. Available with up to 84 branch circuits. Branch breakers are rated 10,000 AIC. Main breakers on 150 & 200 Amp panels are rated at 25,000 AIC.

Metal Enclosure Specifications
Enclosures are made of 16 gauge galvanized sheet steel. The galvanized coating provides corrosion protection and as such does not require paint. All trims used on BR Loadcentres are chromate sealed and finished with an electro-disposition epoxy paint (ASA61) which exceeds requirements for outdoor and indoor applications. A combination surface/flush cover with integral door is supplied with indoor loadcentres rated from 100 through 400 amperes.

All loadcentres are CSA listed to file LL98266.

All loadcentres carry GOS approvals of conformity.

Type BR Loadcentre Features and Benefits

Adjustable Trim
For convenient flush leveling.

Commercial Grade Main Breaker
Designed for straight-in wiring – horizontally operated for top or bottom feed without modification.

Single Piece Bus Bar
Provides superior conductivity.

Maximum Wiring Space
For ease of wiring in compliance with CSA requirements.

Contractor Friendly Knockouts
Improved knockout configurations include tangential knockouts in top and bottom box ends.

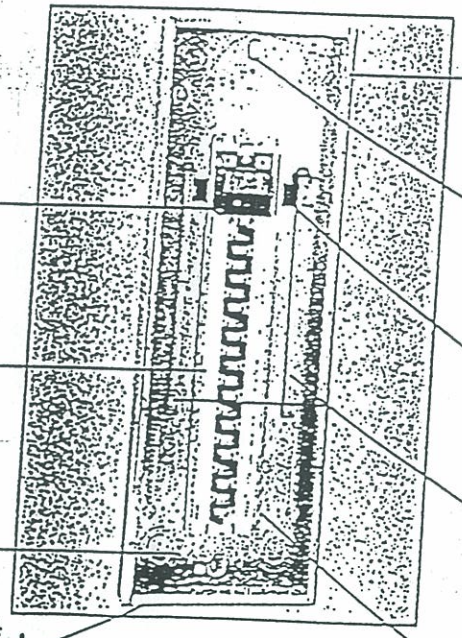

Standard 14-3/8" Wide Enclosure

Six Mounting Holes
Three top, three bottom for ease of installation in either vertical, horizontal or inverted positions.

Dry Wall Markings on Enclosure
Notches on outside of box enclosure indicates depth for dry wall.

Single Keyhole Mounting
Just one keyhole at top and bottom for easier mounting and leveling.

Neutral Bonding Strap
Pre-attached at factory to eliminate loose parts.

Twin Neutral Design
Reduces wireway congestion, provides for easier wiring and load balancing. New I-beam design for improved durability.

Steel Backpan
Provides positive, reliable breaker mounting.

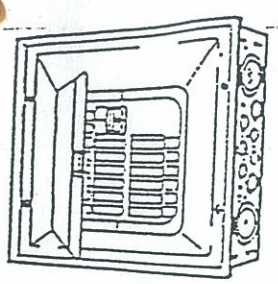

CPM112 Indoor

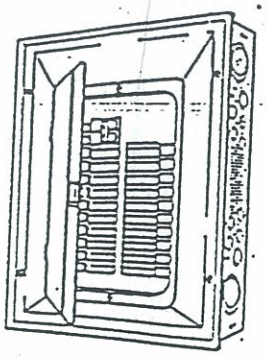

CPM120 Indoor

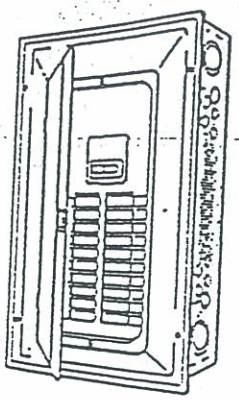

CPM1520 Indoor

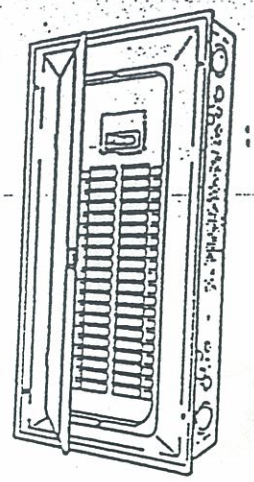

CPM240 Indoor

Type BR, Main Breaker Loadcentres

Single Phase, 3 Wire, 120/240 Volts AC, Combination Service Entrance

Amperes	Catalogue Number	Maximum No. 1-inch Spaces	Maximum No. 1/2 Spaces	Cover Style	Type of Main	Dimensions H	Dimensions W	Dimensions D	Wire Size Range for Main CU/AL
Indoor Type 1									
125 Amp	CPM112	12	24	Flush/Surface	BR①③	18-3/4	14-3/8	3-7/8	#8-2/0
125 Amp	CPM116	16	32	Flush/Surface	BR①③	21	14-3/8	3-7/8	#8-2/0
125 Amp	CPM116Z	16	32	Flush/Surface	BR⑤	21	14-3/8	3-7/8	#8-2/0
125 Amp	CPM120	20	40	Flush/Surface	BR①③	27	14-3/8	3-7/8	#8-2/0
125 Amp	CPM120Z	20	40	Flush/Surface	BR⑤	27	14-3/8	3-7/8	#8-2/0
125 Amp	CPM120W	20	40	Flush/Surface	BRH⑦	27	14-3/8	3-7/8	#8-2/0
125 Amp	CPM130	30	60	Flush/Surface	BR①③	27	14-3/8	3-7/8	#8-2/0
125 Amp	CPM130Z	30	60	Flush/Surface	BR⑤	27	14-3/8	3-7/8	#8-2/0
125 Amp	CPM130W	30	60	Flush/Surface	BRH⑦	27	14-3/8	3-7/8	#8-2/0
150 Amp	CPM1520	20	40	Flush/Surface	CSR②	29-1/8	14-3/8	3-7/8	#1-250MCM
150 Amp	CPM1530	30	60	Flush/Surface	CSR②	34-1/8	14-3/8	3-7/8	#1-250MCM
150 Amp	CPM1540	40	80	Flush/Surface	CSR②	39-1/8	14-3/8	3-7/8	#1-250MCM
200 Amp	CPM216	16	32	Flush/Surface	CSR②	28-7/8	14-3/8	3-7/8	#1-250MCM
200 Amp	CPM220	20	40	Flush/Surface	CSR②	28-7/8	14-3/8	3-7/8	#2-250MCM
200 Amp	CPM230	30	60	Flush/Surface	CSR②	33-7/8	14-3/8	3-7/8	#2-250MCM
200 Amp	CPM240	40	80	Flush/Surface	CSR②	38-7/8	14-3/8	3-7/8	#2-250MCM
400 Amp	CPM442	42	42④	Flush/Surface	DK⑤	66-1/2	16-1/8	6-5/16	(2) #3/0- 250 MCM

① BR-100 Amp Main Breaker is factory installed (BR2100).
② Factory installed 25 kAIC Main Breaker.
High Interrupting BRH Breakers are available on page 16.
③ Restricted due to available neutrals, extra neutrals are available on page which will expand available circuitry to a maximum of 84 circuits.
⑤ DK Breaker is a 65 kAIC Breaker.
⑥ BR2125 main breaker is factory installed.
⑦ BRH2100 – 22kA high interrupting main breaker is factory installed.

600V AC Heavy Duty, Fusible, Single Throw

Specifications

- 30 through 1200 amperes.
- See page 62 for short circuit ratings.
- Horsepower rated.
- Suitable for service entrance use (except on 1200A systems where code requires ground fault protection).
- CSA Certified and C-UL Listed.
- 600V fusible available with or without neutral.
- Padlockable suitcase latch vs screw type latch for 30-100 amperes Type 4X and 12 enclosure.
- Enclosure mounting extensions fabricated as part of the enclosure on Type 4X and 12, 30-200A.

For application accessory options and dimensions see pages 40-45.

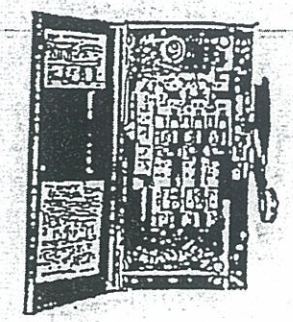

3HD362N

Fusible 277/480-600 Volts

System	Amperes	Fuse Class Provision	Type 1 Enclosure Indoor Catalogue Number	Type 3R Enclosure Rainproof Catalogue Number	Type 12 Enclosure Industrial Dust-tight Catalogue Number
2-Pole – 480V AC – 600V AC or DC①					
	30	H	~~1HD261~~	②	12HD261①
	60	H	1HD262	②	12HD262①
	100	H	~~1HD263~~	②	12HD263①
	200	H	1HD264	②	12HD264①
	400	H	1HD265①	②①	12HD265①
	600	H	1HD266①	②①	12HD266①
	800	L	1HD267①	②①	12HD267①
	1200	L	②	②	②
3-Pole – 480V AC – 600V AC, 250V DC					
	30	H	1HD361	3HD361	12HD361①
	60	H	1HD362	3HD362	12HD362①
	100	H	1HD363	3HD363	12HD363①
	200	H	1HD364	3HD364	12HD364①
	400	H	1HD365	3HD365	12HD365
	600	H	1HD366	3HD366	12HD366
	800	L	1HD367	3HD367	12HD367
	1200	L	1HD368	3HD368	②
4-Wire (Three Blades, 3-Fuses, S/N) 480V AC – 600V AC, 250V DC					
	30	H	1HD361N	3HD361N	12HD361N①
	60	H	1HD362N	3HD362N	12HD362N①
	100	H	1HD363N	3HD363N	12HD363N①
	200	H	1HD364N	3HD364N	12HD364N①
	400	H	1HD365N	3HD365N	12HD365N
	600	H	1HD366N	3HD366N	12HD366N
	800	L	1HD367N	3HD367N	②
	1200	L	1HD368N	3HD368N	②
4-Pole – 480V AC – 600V AC, 250V DC					
	30	H	1HD461	①	②
	60	H	1HD462	①	②
	100	H	1HD463	①	12HD463①
	200	H	1HD464	①	12HD464①
	400	H	1HD465	②	②
	600	H	1HD466	②	②

3

Enclosed Fiberglass Housing

DM DMW

Intended Use

For low to medium mounting heights and harsh environments where dust, dirt, humidity or moisture is present. Ideal for canopies, shipping docks, refrigerated areas, food processing and other non-hazardous environments.

Features

Impact-resistant, UV-stabilized, reinforced polyester fiberglass housing. Shatter-resistant 15% DR acrylic diffuser standard, high impact 50% DR available. Poured-in gasketing provides a continuous seal between housing and diffuser. Captive, corrosion-resistant, cam-action latches secure the diffuser. Stainless steel (STSL) latches are also available.

Ballast – Thermally protected, resetting, Class P, HPF, non-PCB, UL listed, CSA certified ballast is standard. Sound rating depends on lamp/ballast combination.

Wiring and Electrical – AWM, TFN or THHN wire used throughout, rated for required temperatures.

Mounting – For unit or row installations, surface (ceiling or wall) or suspended mounting.

Listings – UL Listed (standard). NOM Certified (see options). Suitable for damp locations. DMW is listed for wet locations.

For product details and performance data, see the FLUORESCENT binder or the on-line catalog at *www.lithonia.com*.

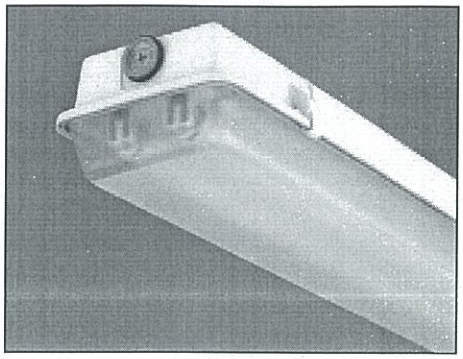

Ordering Information

Example: **DM 2 96 120 ES**

Series

DM Damp location
DMW Wet location
For tandem double-length unit, add prefix **T**.
Example: **TDM**

Number of lamps

1
2
3[1]
Not included.

Lamp type

32 32W T8 (48")
40 40W T12 (48")
48 38W Slimline (48")
48HO 60W 800mA (48")
96 75W Slimline (96")
96HO 110W 800mA (96")
96T8 59W T8 Slimline (96")
96T8HO 86W T8 380mA (96")

Diffuser type

(blank) Acrylic, 15% DR
AR High-impact acrylic, 50% DR
DP Deep acrylic, 15% DR[2]
ARDP Deep high-impact acrylic, 50% DR[2]

Voltage

120
277
347
MVOLT[3]
Others available.

Options/Accessories[4,5]

BCD Mounting bracket to chain-hang DM/DMW (2 per package, excludes chain)[5]
HC Wire hook and 36" chain set (2 per package)[5]
WLF Field-installable wet location fittings to stem-hang DMW on ½" rigid conduit (2 per package). For factory-installed fittings on top, order WLF as an option.
NOM NOM Certified

For additional options and accessories, see page 103.

Availability and Dimensions

Series	Lamps per cross section	Lamps per fixture	Lamp type	Width in. (cm)	Depth in. (cm)	Length in. (cm)
DM, DMW	1, 2, 3[3]	1, 2, 3	32, 40	7⅝ (18.4)	4¾ (9.5)	50 (127.0)
DM, DMW	1, 2	1,2	48, 48HO, 48T8HO	7⅝ (18.4)	5⅝ (13.3)	50 (127.0)
DM, DMW (DP or ARDP)	1, 2, 3[3]	1, 2, 3	32, 40	7⅝ (18.4)	5⅝ (13.3)	50 (127.0)
TDM, TDMW	1, 2	2, 4	32, 40, 48, 48HO, 48T8HO	7⅝ (18.4)	5⅝ (13.3)	98 (248.9)
DM, DMW	1, 2	1, 2	96, 96HO, 96T8, 96T8HO	7⅝ (18.4)	5⅝ (13.3)	98 (248.9)

STANDARD PACKAGING
Fixtures ship complete in unit cartons.
Example: **(Qty 21) DM 2 96 120 ES (21 cartons of fixtures)**

Drawings for dimensional detail only.
May not represent actual mechanical configuration.
Dimensions are shown in inches (centimeters).

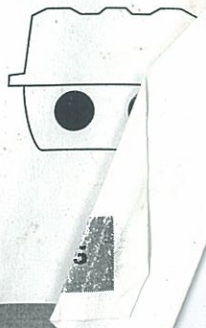

NOTES:
1 3-lamp models only available with T8 lamp source.
2 Deep lens is standard on 4' slimline, HO (800mA) and 8' fixtures. To match deep appearance on 4' rapid start, order **DP** or **ARDP** option.
3 Multi-Voltage ballast operates on any input within the voltage range 120V-277V inclusive at 50HZ or 60HZ. Available as option in the GEB10IS category for 1-4 T8 lamps up to 48" in length only.
4 Cold weather ballasts (**CW** or **CW20**) for use at 40°F ambient temperature or below.
5 Please order accessories as separate catalog numbers.

LITHONIA LIGHTING

Catalog Number	
Notes	Type

FEATURES

INTENDED USE

Provides a minimum of 30 minutes of illumination for the rated wattage upon loss of AC power.

CONSTRUCTION

Rugged 20-gauge white steel cabinet combines simplicity, flexibility and performance.

Two PAR18 composite polycarbonate lamp heads, utilizing 9W T5 wedge-base lamps, metallized reflectors and prismatic polycarbonate lens to provide superior optical control. Optional PAR36 lamp heads (P36) available.

Unique swivel stem connector allows the lamp head to rotate 355°, providing aiming flexibility.

BATTERY

Sealed, maintenance-free lead-calcium battery provides 30 to 120 minutes and 18 to 180W of emergency capacity. Optional long-life battery (LC) has a three-year full warranty; seven-year pro-rata.

Test button and LED indicator provide visual and manual means of monitoring system operation.

ELECTRONICS

Brownout protection and DC fuse.

Reversed battery discharge blocking circuit. Prevents the battery from discharging backward in the charger when the AC feed is not energized and after the LVD has disconnected the load.

AC/LVD reset allows battery connection before the AC power is applied and prevents battery damage from deep discharge.

Solid-state charger provides automatic recharge after a 30 to 120-minute discharge.

120V and 347V input available.

INSTALLATION

Universal mounting plate for a 4" x 4" J-box. Knockouts on top, center and sides facilitate conduit entry.

LISTING

Listed and labeled to comply with Canadian Standards.

WARRANTY

Three-year total customer satisfaction warranty. For details, see Product Selection Guide.

Die-Formed Steel Emergency Lighting Unit

M6

6-Volt Sealed Lead-Calcium Battery

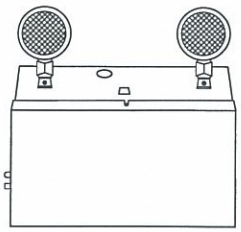

18/72W

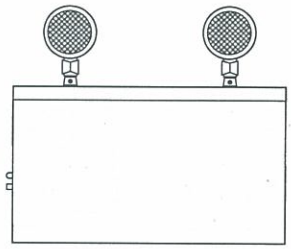

100/180W

TITAN®

ORDERING INFORMATION

Example: **M636 120 CS CSA**

Choose the boldface catalog nomenclature that best suits your needs and write it on the appropriate line. Order accessories as separate catalog number.

Family

6 Volts	
M618	18 watts
M636	36 watts
M650	50 watts
M672	72 watts
M6100	100 watts
M6150	150 watts
M6180	180 watts

Input voltage

120	120 volts
277	277 volts
347	347 volts

Number of heads

(blank)	Two lamp heads
R1	One lamp head
R0	Less lamp heads

Options

LD	Load disconnect switch
TD	Integral time delay
AM	Ammeter
VM	Voltmeter
P36	PAR36 lamp heads
CS	3-foot cordset (120V only)
CSP	3-foot cordset with twistlock plug
LC	Long-life lead-calcium battery
TP	Tamperproof screws
RIF	Radio interference filter (120V only)
CT12	3-foot cab tire, 12 gauge, 20 Amp DC
CT14	3-foot cab tire, 10 gauge, 30 Amp DC
TB	Terminal block input/output
B	Black housing
H0806	8W/6V halogen composite lamps
H1206	12W/6V halogen composite lamps
H0806S	8W/6V sealed-beam halogen lamps (PAR36 only)
H1206S	12W/6V sealed-beam halogen lamps (PAR36 only)

Certification

CSA	Listed and labeled to comply with Canadian Standards

CSA

Accessories

Order as separate item.

ELA TPS	Tamperproof screwdriver
ELA MS	Small mounting shelf
ELA WGM	M Series wireguard
ELA VS3	Vandal shield (fully enclosed; not compatible with PAR36 lamp heads)

M6 Die-Formed Emergency Lighting Unit, 6-Volt, Titan

SPECIFICATIONS

ELECTRICAL

Primary Circuit

Type	AC Input Volts	AC Input Amps	AC Input Watts	Output Volts	Watts Output 1/2hr.	Watts Output 1hr.	Watts Output 1-1/2hrs.	Watts Output 2hrs.
M618	120	.3	33	6	18	9	6	4.5
	277	.13	34					
	347	.11	35					
M636	120	.3	33	6	36	18	12	9
	277	.13	34					
	347	.11	35					
M650	120	.3	33	6	50	25	18	12.5
	277	.13	34					
	347	.11	35					
M672	120	.3	33	6	72	36	24	18
	277	.13	34					
	347	.11	35					
M6100	120	.3	33	6	100	50	34	25
	277	.13	34					
	347	.11	35					
M6150	120	.3	33	6	150	75	50	38
	277	.13	34					
	347	.11	35					
M6180	120	.3	33	6	180	90	60	45
	277	.13	34					
	347	.11	35					

BATTERY

Lead-Calcium (Medium Life)

Voltage	Shelf life	Expected life[1]	Maintenance	Optimum temperature[2]
6	6 mos.	5-8 yrs.	none[3]	60°-90°F (16°-32°C)

1 Based on normal room temperatures and conditions.
2 Optimum ambient temperature range where unit will provide rated capacity for 30 to 120 minutes. Higher and lower temperatures affect life and capacity.
3 Periodic system status test recommended.

MOUNTING

All dimensions are in inches (millimeters).

Shipping weight for panel:
M618 - 6 lbs. (2.7 kgs.)
M636 - 7 lbs. (3.2 kgs.)
M650 - 8 lbs. (3.6 kgs.)
M672 - 8 lbs. (3.6 kgs.)
M6100 - 12 lbs. (5.4 kgs.)
M6150 - 12 lbs. (5.4 kgs.)
M6180 - 16 lbs. (7.3 kgs.)

BACK MOUNTING 18/72W

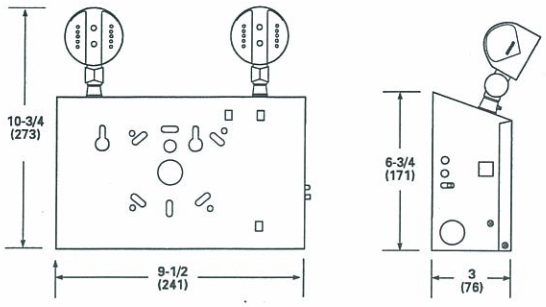

BACK MOUNTING 100/180W

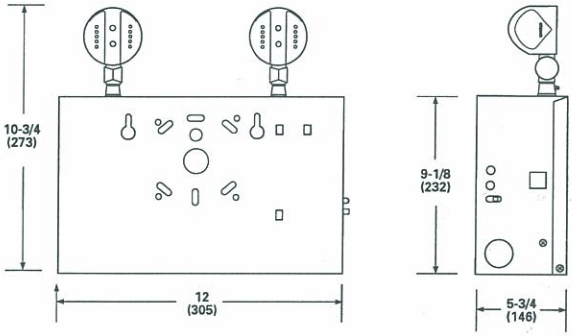

©1997 Lithonia Lighting, Rev. 09/01

Lithonia Lighting
Emergency Lighting
One Lithonia Way, Decatur, GA 30035
Phone: 800-334-8694 Fax: 770-981-8141
In Canada: 1100 50th Ave., Lachine, Quebec H8T 2V3
www.lithonia.com

INSTALLATION INSTRUCTIONS

TITAN® SERIES

XP6/12 AND M6/12 CSA UNIT EQUIPMENT

CAUTION: For safety and proper operation, read and follow instructions carefully before installation.

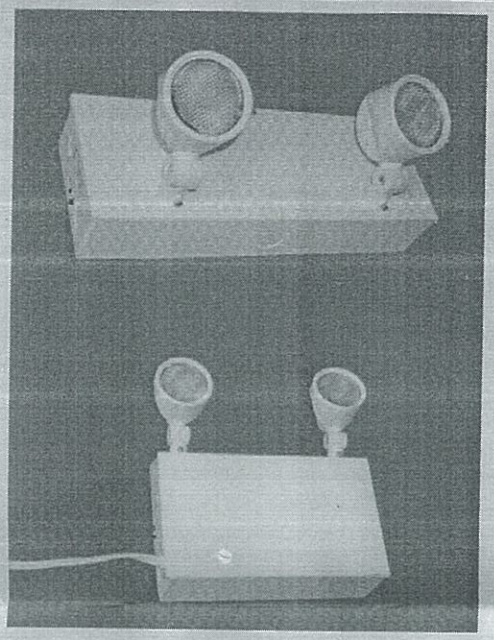

PARTS DESCRIPTION

① Housing
② Front Cover
③ Lamp Head
④ Keyhole Mounting Slot
⑤ Oblong Mounting Slot
⑥ Battery(ies)
⑦ Charger Board
⑧ Retaining Ring
⑨ Lens
⑩ Power light (Optional)
⑪ Charged light
⑫ Test Switch
⑬ Transformer

IMPORTANT SAFEGUARDS

1. READ AND FOLLOW ALL SAFETY INSTRUCTIONS
2. Before wiring to power supply, turn off electricity at fuse or circuit breaker.
3. Disconnect A.C. power and unplug battery before servicing.
4. All servicing should be performed by qualified personnel.
5. Consult your local building code for approved wiring and installation.
6. Do not use outdoors.
7. Do not let power supply cord touch hot surfaces.
8. Do not mount near gas or electric heater.
9. Use caution when servicing batteries. Battery acid can cause burns to skin and eyes. If acid is spilled on skin or in eyes, flush acid with fresh water and contact a physician immediately.
10. Equipment should be mounted in location and at heights where it will not readily be subjected to tampering by unauthorized personnel.
11. The use of accessory equipment not recommended by the manufacturer may cause an unsafe condition.
12. Do not use this equipment for other than intended use.
13. Fixture must be grounded to avoid potential electric shock.
14. CAUTION: Halogen cycle lamp(s) may be used in this fixture. To avoid shattering, do not operate lamp in excess of rated voltage. Protect lamp against abrasions, scratches and against liquids when lamp is operating. Dispose of lamps with care. Halogen lamps operate at high temperatures. Do not store or place flammable materials near lamps.

SAVE THESE INSTRUCTIONS

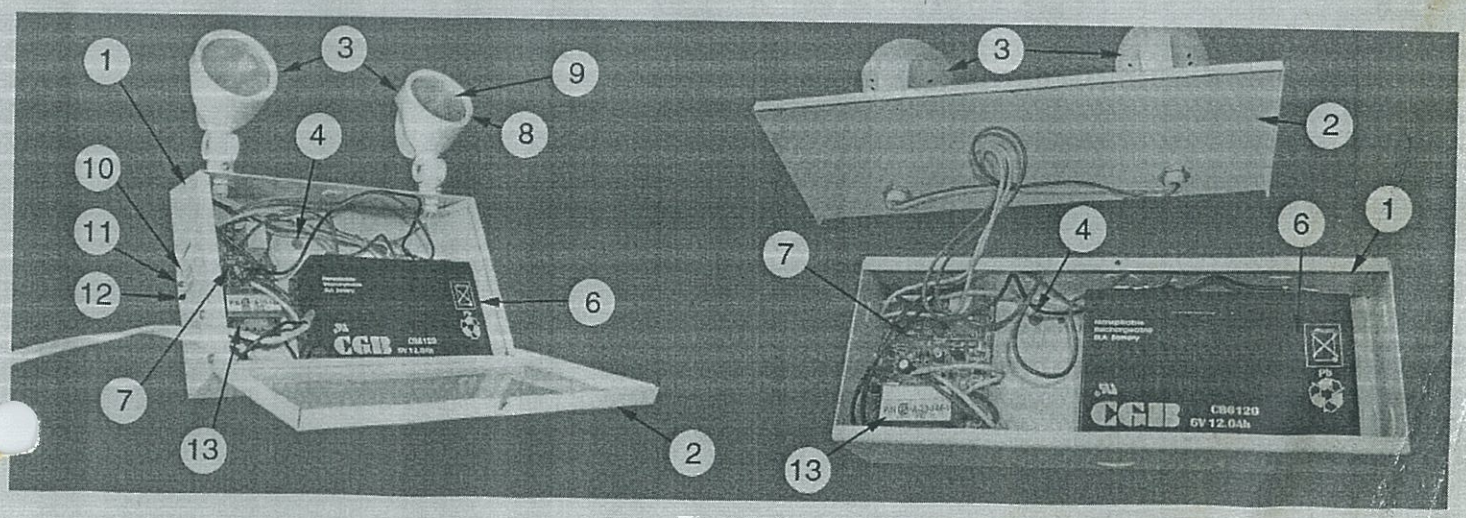

Figure 1

LITHONIA LIGHTING

Catalog Number	
Notes	Type

FEATURES

INTENDED USE

Provides a minimum of 30 minutes of illumination for the rated wattage upon loss of AC power.

CONSTRUCTION

Rugged 20-gauge white steel cabinet combines simplicity, flexibility and performance.

Two PAR18 composite polycarbonate lamp heads, utilizing 9W T5 wedge-base lamps, metallized reflectors and prismatic polycarbonate lens to provide superior optical control. Optional PAR36 lamp heads (P36) available.

Unique swivel stem connector allows the lamp head to rotate 355°, providing aiming flexibility.

BATTERY

Sealed, maintenance-free lead-calcium battery provides 30 to 120 minutes and 18 to 180W of emergency capacity. Optional long-life battery (LC) has a three-year full warranty; seven-year pro-rata.

Test button and LED indicator provide visual and manual means of monitoring system operation.

ELECTRONICS

Brownout protection and DC fuse.

Reversed battery discharge blocking circuit. Prevents the battery from discharging backward in the charger when the AC feed is not energized and after the LVD has disconnected the load.

AC/LVD reset allows battery connection before the AC power is applied and prevents battery damage from deep discharge.

Solid-state charger provides automatic recharge after a 30 to 120-minute discharge.

120V and 347V input available.

INSTALLATION

Universal mounting plate for a 4" x 4" J-box. Knockouts on top, center and sides facilitate conduit entry.

LISTING

Listed and labeled to comply with Canadian Standards.

WARRANTY

Three-year total customer satisfaction warranty. For details, see Product Selection Guide.

Die-Formed Steel Emergency Lighting Unit

M6

6-Volt Sealed Lead-Calcium Battery

18/72W

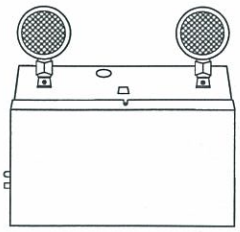

100/180W

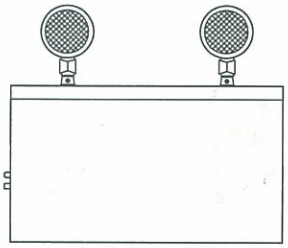

TITAN®

ORDERING INFORMATION

Example: **M636 120 CS CSA**

Choose the boldface catalog nomenclature that best suits your needs and write it on the appropriate line. Order accessories as separate catalog number.

Family

6 Volts	
M618	18 watts
M636	36 watts
M650	50 watts
M672	72 watts
M6100	100 watts
M6150	150 watts
M6180	180 watts

Input voltage

120	120 volts
277	277 volts
347	347 volts

Number of heads

(blank)	Two lamp heads
R1	One lamp head
R0	Less lamp heads

Options

LD	Load disconnect switch
TD	Integral time delay
AM	Ammeter
VM	Voltmeter
P36	PAR36 lamp heads
CS	3-foot cordset (120V only)
CSP	3-foot cordset with twistlock plug
LC	Long-life lead-calcium battery
TP	Tamperproof screws
RIF	Radio interference filter (120V only)
CT12	3-foot cab tire, 12 gauge, 20 Amp DC
CT14	3-foot cab tire, 10 gauge, 30 Amp DC
TB	Terminal block input/output
B	Black housing
H0806	8W/6V halogen composite lamps
H1206	12W/6V halogen composite lamps
H0806S	8W/6V sealed-beam halogen lamps (PAR36 only)
H1206S	12W/6V sealed-beam halogen lamps (PAR36 only)

Certification

CSA

CSA	Listed and labeled to comply with Canadian Standards

Accessories

Order as separate item.

ELA TPS	Tamperproof screwdriver
ELA MS	Small mounting shelf
ELA WGM	M Series wireguard
ELA VS3	Vandal shield (fully enclosed; not compatible with PAR36 lamp heads)

M6 Die-Formed Emergency Lighting Unit, 6-Volt, Titan

SPECIFICATIONS

ELECTRICAL

Primary Circuit

Type	AC Input Volts	AC Input Amps	AC Input Watts	Output Volts	Watts Output 1/2hr.	Watts Output 1hr.	Watts Output 1-1/2hrs.	Watts Output 2hrs.
M618	120	.3	33	6	18	9	6	4.5
	277	.13	34					
	347	.11	35					
M636	120	.3	33	6	36	18	12	9
	277	.13	34					
	347	.11	35					
M650	120	.3	33	6	50	25	18	12.5
	277	.13	34					
	347	.11	35					
M672	120	.3	33	6	72	36	24	18
	277	.13	34					
	347	.11	35					
M6100	120	.3	33	6	100	50	34	25
	277	.13	34					
	347	.11	35					
M6150	120	.3	33	6	150	75	50	38
	277	.13	34					
	347	.11	35					
M6180	120	.3	33	6	180	90	60	45
	277	.13	34					
	347	.11	35					

BATTERY

Lead-Calcium (Medium Life)

Voltage	Shelf life	Expected life[1]	Maintenance	Optimum temperature[2]
6	6 mos.	5-8 yrs.	none[3]	60°-90°F (16°-32°C)

1 Based on normal room temperatures and conditions.
2 Optimum ambient temperature range where unit will provide rated capacity for 30 to 120 minutes. Higher and lower temperatures affect life and capacity.
3 Periodic system status test recommended.

MOUNTING

All dimensions are in inches (millimeters).

Shipping weight for panel:
M618 - 6 lbs. (2.7 kgs.)
M636 - 7 lbs. (3.2 kgs.)
M650 - 8 lbs. (3.6 kgs.)
M672 - 8 lbs. (3.6 kgs.)
M6100 - 12 lbs. (5.4 kgs.)
M6150 - 12 lbs. (5.4 kgs.)
M6180 - 16 lbs. (7.3 kgs.)

BACK MOUNTING 18/72W

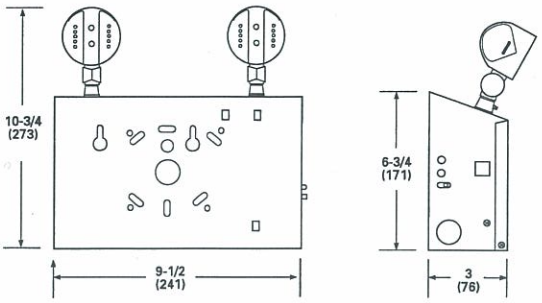

BACK MOUNTING 100/180W

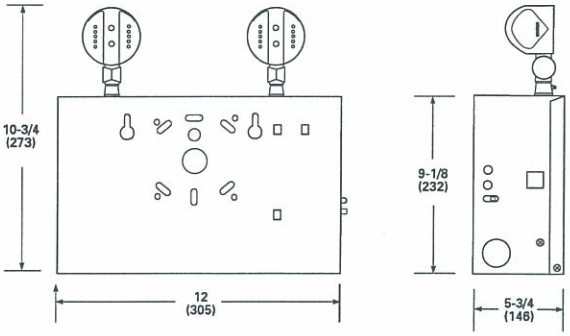

©1997 Lithonia Lighting, Rev. 09/01

Lithonia Lighting
Emergency Lighting
One Lithonia Way, Decatur, GA 30035
Phone: 800-334-8694 Fax: 770-981-8141
In Canada: 1100 50th Ave., Lachine, Quebec H8T 2V3
www.lithonia.com

BEFORE INSTALLATION

Unit should be located to assure adequate clearance for front cover and lampheads.

Do not position unit where it will be exposed to direct sunlight, radiators, or other heat sources. Prolonged exposure to high temperatures will shorten battery life and may void warranty.

NOTE: Some models may have the transformer mounted on the housing rather then the charger board.

CAUTION: Damage to battery will occur if battery is connected to charger board for a prolonged period of time without A.C. power provided.

CAUTION: Before wiring to power supply, turn off electricity at fuse or circuit breaker. Disconnect A.C. power and unplug before servicing.

INSTALLATION

MOUNTING TO WALL USING J-BOX

1. Remove appropriate knockouts from rear of Housing ①. Locate center 7/8" knockout over J-Box.
2. Install fastener with a minimum pullout rating of 30 pounds in each Keyhole Mounting Slot ④ and in lower Oblong Mounting slot ⑤.

MOUNTING WITH SURFACE CONDUIT

1. Two 7/8" dia. Knockouts are located on either side of housing ① for conduit connection. Remove lower Oblong Mounting Knockout ⑤ from rear of housing, and remove desired 7/8" knockout.
2. Install fastener with minimum pullout rating of 30 pounds in each keyhole mounting slot ④ and in lower oblong mounting slot ⑤.

WIRING

1. Connect A.C. input as follows:
   120V A.C. – Black
   347V A.C. – Red

2. Place Battery ⑥ inside Housing ①, and connect battery terminals to terminals from charger board ⑦. In units with double-stick tape, remove paper backing from tape and secure battery in place.

CAUTION: Be sure red lead is connected to positive terminal and black lead is connected to negative terminal.

INSPECTION AND MAINTENANCE

NOTE: Emergency lighting systems should be tested as often as local codes require, or at least monthly, to ascertain that all components are operational.

A. **NORMAL OPERATION:** When unit is functioning properly, with A.C.power provided, the "READY" light ⑩ will be on.

B. **TO TEST:** Push "TEST" button, battery power will be switched and "READY" light should go out.

C. **CHARGER BOARD REPLACEMENT:** Disconnect wiring as shown in Fig 2 & 3. Charger board ⑦ is secured to Housing ① with three #6 metal screws. Remove screw and lift charger board⑦ from unit. Install replacement charger board and reconnect wiring as shown in Fig 2 & 3.

D. **BATTERY REPLACEMENT:** Disconnect battery⑥. Replace battery⑥ only with manufacturer's recommended replacement. Reconnect battery⑥ as shown in Fig 2 & 3.

E. **TRANSFORMER REPLACEMENT:** Disconnect wiring as shown in Fig 2 & 3. Remove screws holding transformer⑬ in place. Replace transformer⑬ and secure in place and reconnect wiring as shown in Fig 2 & 3.

F. **LAMP REPLACEMENT:** Remove retaining ring⑧ by carefully prying it from the lamp housing. Remove Lens⑨. Remove lamp from socket and replace with an identical lamp. Replace lens and retaining ring will snap into place.

NOTE: It is important to replace burnt lamp with a new lamp of the same voltage and wattage. Higher wattages cause the battery to discharge faster (less operating time) or may overload the relay. Lower wattages may not provide adequate lighting intensity. Lamp #908-6V-9W, lamp #915-12V-9W.

G. **FUSE REPLACEMENT:** Disconnect wiring as shown Fig. 2 & 3. Remove fuse from board and replace with an identical fuse. Reconnect wiring as shown in Fig 2 &3.

NOTE: This equipment to be connected to an unswitched circuit. Allow battery to charge 24 hours before initial testing and 72 hours to fully charge battery.

WIRING DIAGRAMS

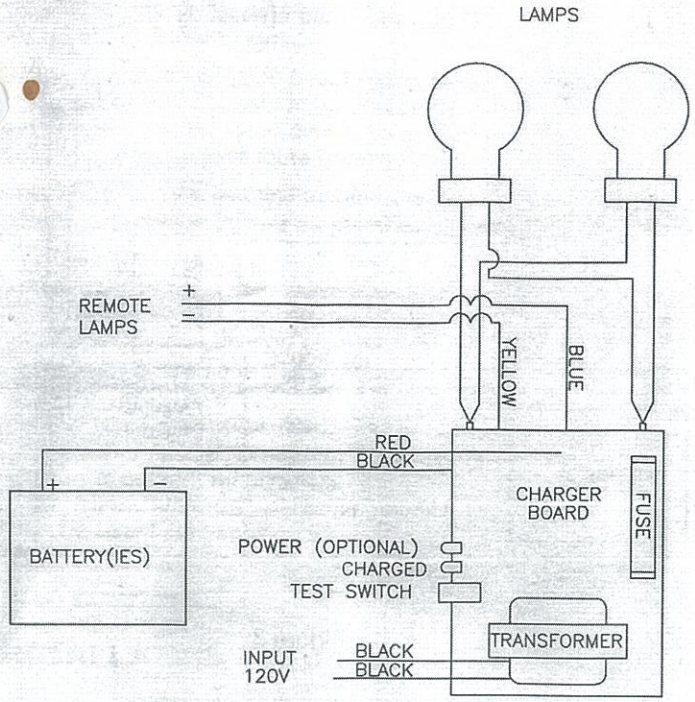

Figure 2
120V

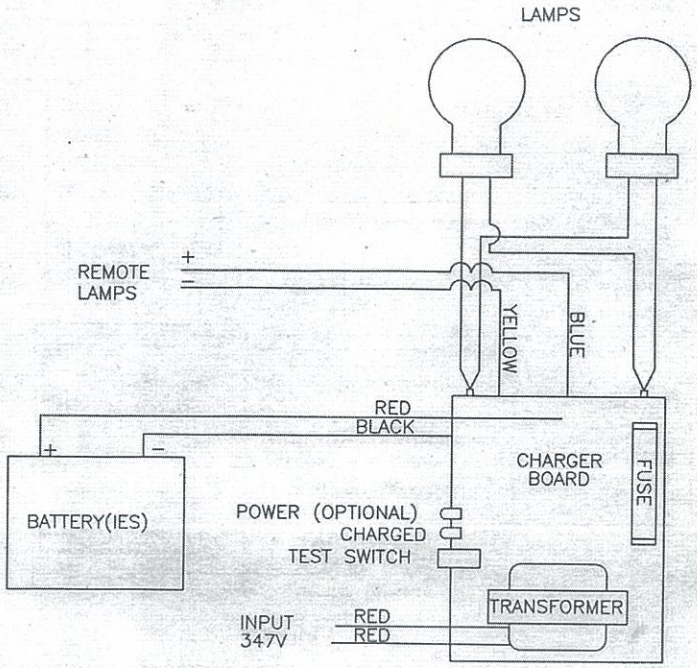

Figure 3
347V

Test Chart:

Always keep the chart below up to date for security and for the warranty records.

N.B.: Building and licensing authorities in many parts of Canada require you to keep records showing that you have checked and tested this emergency lighting unit on a regular basis. Use the handy chart supplied to keep these records and follow the guidelines.

TEST RECORD CHART

Model/Type: Location:

YEAR	JAN DATE/INIT	FEB DATE/INIT	MAR DATE/INIT	APR DATE/INIT	MAY DATE/INIT	JUN DATE/INIT	JUL DATE/INIT	AUG DATE/INIT	SEPT DATE/INIT	OCT DATE/INIT	NOV DATE/INIT	DEC DATE/INIT	YEARLY TEST DATE/INIT / ELECTR LOSS
	/	/	/	/	/	/	/	/	/	/	/	/	/ /
	/	/	/	/	/	/	/	/	/	/	/	/	/ /
	/	/	/	/	/	/	/	/	/	/	/	/	/ /
	/	/	/	/	/	/	/	/	/	/	/	/	/ /
	/	/	/	/	/	/	/	/	/	/	/	/	/ /
	/	/	/	/	/	/	/	/	/	/	/	/	/ /
	/	/	/	/	/	/	/	/	/	/	/	/	/ /
	/	/	/	/	/	/	/	/	/	/	/	/	/ /
	/	/	/	/	/	/	/	/	/	/	/	/	/ /
	/	/	/	/	/	/	/	/	/	/	/	/	/ /

WARRANTY
THREE-YEAR TOTAL CUSTOMER SATISFACTION

Complete Customer Satisfaction...This fixture is guaranteed to perform to our customers' complete satisfaction for a period of three years from date of invoice. Our guarantee covers any defect in manufacturing, provided the defect develops under normal and proper use. This liability does not include lamps, and extends only to replacement of the defective part and labor charges for correction of the defect by repair or replacement. These labor charges will be honored by the factory only with prior written approval from our Marketing Services Department.

LITHONIA LIGHTING
EMERGENCY LIGHTING SYSTEMS
ONE LITHONIA WAY, DECATUR, GEORGIA 30035, TELEPHONE 770 987-4200, FAX 770 981-8141
IN CANADA: 1100 50TH AVE., LACHINE, QUEBEC H8T 2V3, A UNIT OF N.S.I. HOLDINGS, INC.
www.lithonialighting.com

MAPLE/CHASE COMPANY

FIREX® SMOKE ALARMS

USER'S MANUAL

READ AND SAVE FOR YOUR SAFETY

This symbol on the product means the product is listed by Underwriters Laboratories of Canada

MODEL FXW-R
IONIZATION TYPE
AC DIRECT WIRE

LINE VOLTAGE
INTERCONNECT UNITS.

PRINTED IN U.S.A.

WARNING

This smoke alarm will sound a short beep when power is connected. Do not interconnect with Firex Models G-6 (0406C); G-18 (0418C); G-120 (0420C); AD (04418C); or PG-40 (0484C). Do not use with smoke alarm models other than those listed as suitable in this manual.

IMPORTANT INFORMATION ABOUT YOUR SMOKE ALARM

- This 120 volt AC smoke alarm must only be put up by a qualified licensed electrician.
- This user's manual must be given to the occupant of the home, and transferred to all subsequent users.
- Before installing your smoke alarm, you must read this entire User's Manual.
- Install a smoke alarm in each room and in each other area of your home. See section 3.
- Smoke alarms cannot give you an early warning of fire or smoke unless you install, use and maintain them by following these instructions.
- Smoke alarms cannot detect all fires and smoke conditions.
- You must hear the alarm's warning sound and quickly respond to it to reduce the risk of damage, injury, or death that may result from a fire.
- A smoke alarm should never be used, in any case, for more than 10 years.

MODEL FXW-R

- This Smoke alarm will not work without 120 AC power properly connected. The smoke alarm must be tested when installed and then every week after that.
- The constant green light under the Push and Hold To Test Weekly button shows that the unit is connected properly.

1. WHAT SMOKE ALARMS CAN DO:

Smoke alarms can only HELP protect your home and family against loss resulting from a fire. The best protection is obtained by installing smoke alarms near the center of each room, and each other area of the home, making sure that the people in the home will be able to hear and respond to the alarm sound.

Interconnecting smoke alarm, such as FXW-R, together can increase your safety by having two or more alarms sounding in multiple locations. The wiring connecting the smoke alarm carries a signal which will cause all interconnected alarms to sound when smoke is sensed at the location of the originating alarm. For example, one smoke alarm could be in a basement, and other interconnected units could be located in a central hallway, bedroom, or other area which assures the horns will be heard.

Your smoke alarm meets or exceeds the requirements for audibility, or loudness, set by Underwriters' Laboratories of Canada.

WARNING - SMOKE ALARMS MAY GIVE YOU A WARNING OF FIRE AND SMOKE, BUT ONLY IF YOU INSTALL, USE, AND MAINTAIN THEM IN ACCORDANCE WITH THESE INSTRUCTIONS.

2. WHAT SMOKE ALARMS WILL NOT DO:

A SMOKE ALARM WILL NOT WORK WITHOUT POWER. Your smoke alarm needs 120 volt AC power properly connected. A smoke alarm will not work if the power is turned off, or is interrupted for any reason.

A SMOKE ALARM WILL NOT SENSE A FIRE WHEN THE SMOKE CANNOT REACH THE ALARM. If a fire starts in a chimney, wall, roof, the other side of a closed door, or any other isolated area, the smoke alarm may not sense the smoke and will not give a warning. If you do not have an alarm in the bedroom, and sleep with the door closed, a fire inside the bedroom may not sound the alarm located in another room. This is why a smoke alarm must be placed both inside and outside all bedrooms. A SMOKE ALARM WILL NOT PROMPTLY SENSE A FIRE EXCEPT IN THE AREA OR ROOM IN WHICH THE SMOKE ALARM IS LOCATED.

FOR EXAMPLE:

A.) A SMOKE ALARM MAY NOT SENSE A FIRE ON ANOTHER LEVEL OF A RESIDENCE OR BUILDING. A second-floor smoke alarm may not detect a fire on the first floor or basement of a building in sufficient time to allow safe escape by the normal exit path. This is why smoke alarms must be installed on every floor or level of your home or building.

B.) IF THE SMOKE ALARM IS LOCATED ON A DIFFERENT LEVEL THAN THE BEDROOMS, OR ISOLATED AREA OF THE HOUSE OR RESIDENCE, IT IS LESS LIKELY TO WAKE UP PEOPLE SLEEPING IN THE BEDROOMS. Because of this, the National Fire Protection Association (NFPA) recommends that smoke alarms be wired together so that an alarm on any level of the residence will sound an alarm loud enough to awaken sleepers in closed bedrooms. This can be done by installing and interconnecting multiple station alarms.

ALL TYPES OF SMOKE ALARMS HAVE LIMITATIONS. NO TYPE OF SMOKE ALARM CAN SENSE EVERY KIND OF FIRE OR SMOKE EVERY TIME. Although ionization smoke alarms (such as this smoke alarm) are your best overall choice for reliability and fast response time (NFP Research Foundation and U.S. Fire Administration Data) since they quickly sense small "invisible" smoke particles and will also sense larger "visible" smoke particles; note, photoelectric smoke alarms may respond more quickly in certain types of fires, for example slow smoldering fires with large "visible" smoke particles.

WARNING – SMOKE ALARMS WILL NOT WORK DURING A LOSS OF POWER.

Using an smoke alarm in a smoky area like a kitchen, or in a high humidity area near a shower, can cause false alarms. DO NOT TURN OFF THE AC POWER TO QUIET THE ALARM. A SMOKE ALARM WILL NOT HELP PROTECT YOU IF IT IS NOT POWERED. Properly locate your alarm to avoid nuisance alarms.

A SMOKE ALARM MAY NOT ALWAYS WARN YOU ABOUT FIRES CAUSED BY CARELESSNESS AND SAFETY HAZARDS LIKE SMOKING IN BED, VIOLENT EXPLOSIONS, ESCAPING GAS, IMPROPER STORAGE OF FLAMMABLE MATERIALS, OVER-LOADED ELECTRICAL CIRCUITS, CHILDREN PLAYING WITH MATCHES, NATURAL CAUSES SUCH AS LIGHTNING, OR ARSON. FIRE PREVENTION IS YOUR BEST SAFEGUARD.

Installing smoke alarms may make you eligible for lower insurance rates, but SMOKE ALARMS ARE NOT A SUBSTITUTE FOR INSURANCE. Homeowners and renters alike should continue to insure their lives and properties.

3. WHERE YOU SHOULD INSTALL YOUR SMOKE ALARMS:

- DO INSTALL YOUR SMOKE ALARMS IN ACCORDANCE WITH ALL APPLICABLE LAWS, REGULATIONS, STANDARDS AND CODES.
- DO INSTALL A SMOKE ALARM IN THE HALLWAY OUTSIDE OF EVERY BEDROOM AREA. IF THE BEDROOM HAS A DOOR, THERE MUST BE A SMOKE ALARM INSIDE AND OUTSIDE THE BEDROOM. SEE FIGURE 1. IF YOUR HOME OR RESIDENCE HAS TWO BEDROOM AREAS, A SMOKE ALARM MUST BE PLACED OUTSIDE THE SECOND BEDROOM AREA AND INSIDE THE BEDROOM(S) IF THEY HAVE DOORS. SEE FIGURE 2. IF YOUR HOUSEHOLD OR RESIDENCE HAS SEVERAL FLOORS, THERE MUST BE AN ALARM ON EVERY FLOOR, INCLUDING THE BASEMENT. SEE FIGURE 3.

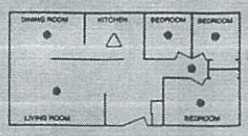

FIGURE 1

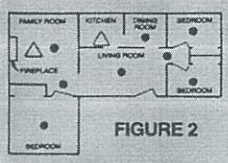

FIGURE 2

Δ - DENOTES SMOKE ALARM WITH FALSE ALARM CONTROL

● - DENOTES ANY TYPE OF SMOKE ALARM

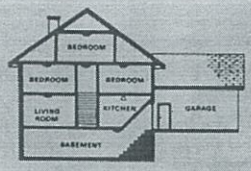

FIGURE 3

- DO INSTALL A SMOKE ALARM IN EVERY BEDROOM WHERE A SMOKER SLEEPS.
- DO INSTALL A SMOKE ALARM IN EVERY ROOM AND BEDROOM WHERE ELECTRICAL APPLIANCES (such as portable heaters, humidifiers, or electric blankets) MAY BE OPERATED WHILE SOMEONE SLEEPS.
- DO INSTALL A SMOKE ALARM INSIDE EVERY BEDROOM WHERE SOMEONE SLEEPS WITH THE DOOR CLOSED. Smoke can be blocked by the closed door, or the alarm may not wake the sleeper if the door is closed.
- DO INSTALL SMOKE ALARMS AT BOTH ENDS OF A BEDROOM HALLWAY IF THE HALLWAY IS MORE THAN 30 FEET LONG.

DO INSTALL BASEMENT SMOKE ALARMS AT THE BOTTOM OF THE BASEMENT STAIRWELL.

DO INSTALL SECOND FLOOR SMOKE ALARMS AT THE TOP OF THE FIRST-TO-SECOND FLOOR STAIRWELL, as long as no other door or obstruction blocks the path of the smoke to the alarm.

- DO INSTALL A SMOKE ALARM IN A ROOM WHERE FLAMMABLE HOUSEHOLD CHEMICALS OR HOUSEHOLD SOLVENTS ARE STORED. For example, if you keep kerosene, paint thinner, or certain types of contact cements within your residence, install a smoke alarm in that room, unless not recommended by a situation described in section 5.
- DO INSTALL SMOKE ALARMS ON THE CEILING, AS CLOSE TO THE CENTER OF THE ROOM AS YOU CAN. If this is not practical, mount it on the ceiling, but no closer than 4 inches to any wall or corner. See figure 4.

If ceiling mounting is not practical or possible, and wall mounting is allowed by state and local fire codes, mount your smoke alarm on the wall at least 4, but no more than 12 inches down from the ceiling. See figure 4.

If your ceiling has radiant heat or has a lack of insulation to the outside, ceiling mounting of your smoke alarm is not advisable due to temperature variations. You should follow the wall mounting procedures.

If you have a peaked, sloped, gabled, or cathedral styled ceiling, mount your smoke alarm 3 FEET MEASURED HORIZONTALLY FROM THE HIGHEST POINT ON THE CEILING AS SHOWN IN FIGURE 4.

Do install smoke alarms in both rooms (areas) that are divided by a partial wall extending 8 or more inches down from the ceiling. See smoke alarms located in rooms B and C of figure 4.

4. SPECIAL DIRECTIONS FOR INSTALLING YOUR SMOKE ALARM IN MANUFACTURED AND MOBILE HOMES.

WARNING: Smoke alarms may be installed on the ceilings of manufactured and mobile homes if there is adequate insulation in the ceiling.

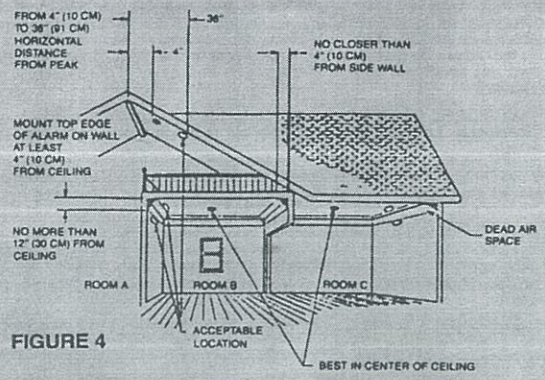

FIGURE 4

Install smoke alarms on walls only between 4 and 12 inches of ceiling. Install smoke alarms on inside walls in older homes or in homes where you are not sure of the insulation level. In older homes (manufactured in approximately 1976 or before) that have little or no insulation compared to today's standards, uninsulated metal outside walls and roofs can transfer heat and cold from the outdoors, making the air right next to the wall or roof hot or cold, compared to the rest of the air inside the room. These layers of hot or cold air can prevent smoke from reaching a smoke alarm. If your mobile home has this condition, put your smoke alarm on an inside wall only, between 4 and 12 inches from the ceiling. If you are not sure about the insulation in your mobile home, or if you notice that the outside walls or ceiling are unusually hot or cold, put the smoke alarm on an inside wall.

5. WHERE YOU SHOULD NOT INSTALL SMOKE ALARMS:

A) In new construction, where two or more smoke detectors are required within a living unit they shall be installed so that the alarm is clearly audible throughout the living unit over background noise levels with all intervening doors closed. A living unit is an area in which the family or person lives. This does not include common area in multi-family buildings such as corridors, lobbies, or basements.

B) In a multiple station installation, it is not recommended to extend the interconnected units into other family living units or into common basement or hallway areas. This is because a false alarm in one unit would be a nuisance if it sounded an alarm in another family living unit or common area.

It is preferable that a smoke alarm with FALSE ALARM CONTROL be installed in an area where particles of combustion are normally present, such as kitchens or automobile garages. However, a normal alarm may be used in these locations as long as the installer or user recognizes the possibility exists of false alarms due to these locations.

DO NOT install a smoke alarm within close proximity of heating and cooling supply vents or within close proximity of return air or fresh air vents. Smoke could be diffused or reduced by being diverted into the return air vent.

DO NOT install your smoke alarm in an area where the temperature may fall below 40 degrees Fahrenheit, or rise above 100 degrees Fahrenheit. Smoke alarms are designed to work safely only within these temperature ranges, and failure to alarm, improper alarms or nuisance alarms may result from operation outside of these temperature limits.

DO NOT install a smoke alarm in a damp or very humid area such as in bathrooms with showers, where the normal humidity may rise above 93% Relative Humidity. Above this level, moisture may condense inside the smoke chamber and cause wrong or false alarms.

DO NOT install a smoke alarm in an area where particles of combustion are normally present, such as kitchens or automobile garages unless the smoke alarm has a False Alarm Control feature.

DO NOT install a smoke alarm in dusty or dirty areas; SUCH AN INSTALLATION CANNOT BE RELIED UPON. An accumulation of dust and dirt in a smoke alarm's sensing chamber may block the openings and prevent an alarm, or may get inside the alarm and cause false alarms. If a smoke alarm is required in such an area, vacuum it frequently and test it according to Section 7.

DO NOT install a smoke alarm where bugs and insects are present before eliminating or minimizing the bug problem. Bugs may build up on chamber openings and prevent smoke from entering. As a result, unit should be vacuumed frequently as explained in Section 8.

DO NOT install a smoke alarm within close proximity of a fluorescent light. Electrical "noise" may cause nuisance alarms.

DO NOT install a smoke alarm in the dead air space in the corner where the wall meets the ceiling. If in doubt as to the exact location of mounting, for your safety, contact your local fire department for help in choosing a location.

6. HOW TO INSTALL YOUR SMOKE ALARM AND HOW TO INTERCONNECT IT WITH ADDITIONAL FX1020, FX1106, FXW-1A OR FXW-R ALARMS.

AFTER HAVING CAREFULLY READ THE INTRODUCTION AND SECTION 1 THROUGH 6, YOU ARE READY TO INSTALL YOUR SMOKE ALARM.

WARNING: ALL ELECTRICAL INSTALLATION, INCLUDING WIRING, SHOULD BE PERFORMED BY A QUALIFIED ELECTRICIAN AND IN ACCORDANCE WITH THE REQUIREMENTS OF ARTICLE 760 OF THE NATIONAL ELECTRICAL CODE AND ANY LOCAL CODES ADOPTED BY YOUR COMMUNITY.

PLEASE FOLLOW THESE DIRECTIONS:

MODEL FXW-R

6-1 *Turn off main power to circuit and be sure it cannot be turned on until work is complete.*

6-2 Unlock and remove mounting plate from the smoke alarm itself with a counterclockwise twist.

6-3 Screw mounting plate to 4" octagon or single gang box. (CAUTION: Do not warp mounting plate by over-tightening screws.)

6-4 Wire smoke alarm for either single or multiple station (see wiring instructions below).

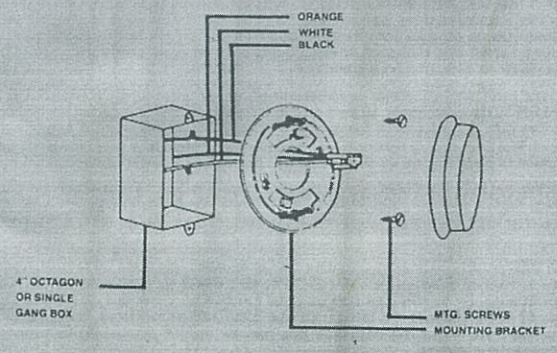

CAUTION:

- **Do not interconnect with Firex models G-6 (0406C), G-18 (0418C), G-120 (0420C), AD (04418C),or PG-40 (0484C). These models can be identified by a yellow interconnect wire for multiple station interconnection. Do not use with smoke alarm models other than those listed as suitable in this manual. Doing so will permanently damage the alarm.**

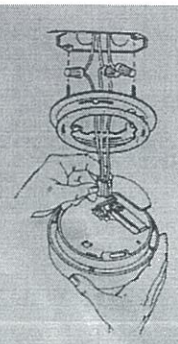

6-5 Attach smoke alarm to mounting bracket with clockwise twist until unit snaps into locked position.

6-6 Turn on main power. Constant green light on cover indicates AC power is on.

6-7 Test smoke alarm (see Section 7).

WIRING – ALL SMOKE ALARMS

- Your smoke alarm operates from a 120V AC supply rated at 0.1 AMPS, 60 Hz.
- Your smoke alarm comes equipped with 3 color coded leads for permanent electrical connections.
- The black and white leads are for connection to the 120 VAC supply. Failure to observe the polarity shown can result in continuous alarm and could damage the unit (see wiring).
- The orange lead is for multiple station interconnection to FX-1020, FX-1106, FXW-1A or FXW-R model smoke alarms only. Do not interconnect with Firex models which utilize yellow interconnect wires. Connection to any other circuit will result in damage to the unit. Maximum wire length between any two detectors is 1,175 feet for #18 AWG or 2,970 feet for #14 AWG (15 OHMS loop resistance).
- Use of a single phase dedicated AC branch circuit for all smoke alarms is preferable in that it will minimize nuisance alarms due to power line transients. However, some state and local codes prohibit this wiring scheme. Check for these codes before beginning your installation.
- Orange wire is for interconnection only. DO NOT CONNECT TO ANY OTHER CIRCUIT. Use proper wire (#18 AWG Minimum).**
- Failure to observe polarity can result in continuous alarm and damage to the unit.
- If more than one source of AC power is used in an interconnect system, the neutral wire must be common to both phases.

WIRING – SINGLE STATION

Install two color coded wires (#18 AWG Minimum)** between smoke alarm and 120 VAC power source. Make white to white and black to black connections.

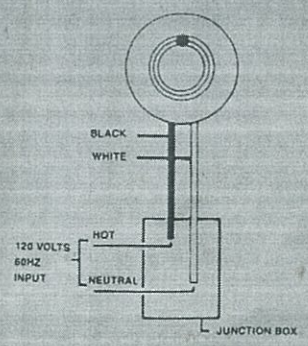

SINGLE STATION

WIRING – MULTIPLE STATION

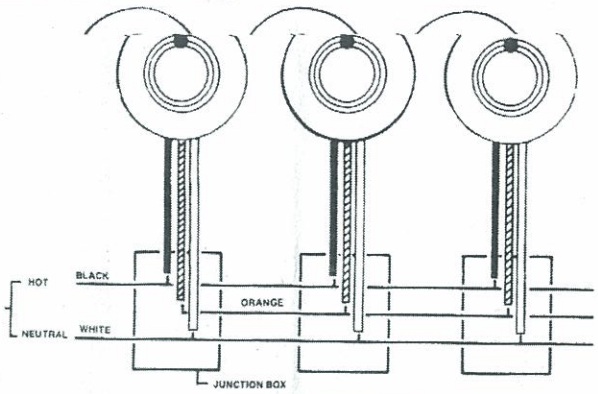

MULTIPLE STATION

MAXIMUM NUMBER OF INTERCONNECTED UNITS

Model	# Of Units
FXW-R	1-18

** Meets all requirements of NEC760

Install 3 color coded wires (#18 AWG Min.)** between interconnected smoke alarms and 120 VAC power source. Make wire connections as shown. Observe proper polarity by following color code with all units.

- FOR DIRECT WIRE 120 VAC-POWERED UNITS: Your Smoke Alarm is powered when the light is constant green. The interconnect feature of 120 VAC powered units will only work when all units are receiving rated 120 VAC.

NOTE: Smoke alarms using the multiple station wiring system offer a simultaneously audible alarm of all units. The green light will turn off on the smoke alarm that originated the alarm, and the light on all the other interconnected smoke alarms will remain constant green.

7. WEEKLY TESTING OF YOUR SMOKE ALARM

The first test will tell you if you have connected the unit(s) properly. For your safety, you must repeat this procedure weekly to test for proper operation.

7-1 FOR A COMPLETE WEEKLY TEST OF THE ELECTRONICS AND THE IONIZATION SENSOR OPERATION, FIRMLY DEPRESS THE TEST BUTTON FOR AT LEAST FIVE (5) SECONDS. The smoke alarm will sound by making a beeping sound, about 4 beeps per second. If you have multiple station interconnected alarms, all alarms will sound when any test button is pushed. The smoke alarm(s) will stop sounding when you release the button.

7-2 "Multiple station units must be tested for proper alarm interconnect at time of installation, and periodically thereafter." At least two people are required to perform this test. One person should press the test button on a location of each additional smoke alarm that is multiple-station wired, one at a time. The other person(s) must verify that the additional smoke alarms sound an alarm signal when the first person is causing an alarm condition by pressing the test button. This test is necessary to verify proper wiring of the interconnect wire between all interconnected multiple-station smoke alarms and to verify continued proper operation.

7-3 FOR A COMPLETE WEEKLY TEST TO ENSURE THAT SMOKE WILL REACH THE IONIZATION SENSOR AND THAT THE SENSOR IS NOT PLUGGED WITH GREASE, DIRT, DUST, GRIME, INSECTS OR ANY TYPE OF OBSTRUCTION, YOU MUST TEST IN A CAREFUL FIRE-SAFE MANNER by blowing smoke directly into the smoke alarm until the alarm sounds. The hole on the cover is for sound only and will not sense smoke. NEVER USE AN OPEN FLAME OF ANY KIND TO TEST YOUR SMOKE ALARM, YOU MAY IGNITE AND DAMAGE THE SMOKE ALARM OR YOUR HOME. (The smoke alarm will stop sounding when the smoke is cleared from the sensing chamber. Blowing or fanning fresh air into it will help to clear it.)

7-4 ONCE A WEEK check the indicator light under the "Push and Hold To Test Weekly" button on the smoke alarm. If 120 volts AC Power is connected and the smoke alarms receiving power, the indicator light w remain constant green.

7-5 Always test your smoke alarm upon returning from vacation, or an other time when no one has been in your household or residence fc several days.

7-6 If your smoke alarm does not respond as described in any of th above tests, check that 120 VAC power is applied. For your protectio immediately replace the unit with one that operates properly. If power i properly applied, promptly have a qualified electrician disconnect th smoke alarm, remove the unit, repack it and return it for repair c replacement (see warranty section 9).

WARNING: iF A SMOKE ALARM IS INSTALLED IN A MOBILE HOM OR RV, TEST THE SMOKE ALARM AFTER YOU REMOVE THI VEHICLE FROM STORAGE AND BEFORE EACH TRIP.

8. TAKING CARE OF YOUR SMOKE ALARM

Your smoke alarm has been designed and manufactured to be a maintenance free as possible. Here are a few simple steps you mus perform, in addition to the weekly tests described in Section 7, to kee your unit in good working order:

The smoke alarm should be vacuumed monthly or more often if there i dust, dirt, or kitchen grease that can accumulate. Use a soft brush or wan attachment, and vacuum all slots in the cover and side. FOR YOUI SAFETY, you must properly clean and maintain your Smoke Alarm, sinc a dirty or malfunctioning unit may either fail to alarm or cause unwante nuisance alarms.

If the unit is either damaged or fails to operate properly and you hav checked that AC power is applied, follow the directions in Section 10 fc return. FOR YOUR SAFETY, DO NOT OPEN THE SMOKE ALARM OI TRY TO REPAIR IT YOURSELF. While smoke alarms are economice devices, they contain precision electronic components that are precisel calibrated. Repair must be done by the manufacturer.

9. WARRANTY INFORMATION:

5 YEAR LIMITED WARRANTY

Maple Chase Company warrants to the original consumer purchaser eac new smoke alarm to be free from defects in material and workmanshi under normal use and service for a period of five (5) years from date c purchase. Maple Chase Company agrees to repair or replace, at its optior any defective smoke alarm, provided that it is returned with postag prepaid and with proof of purchase date to Maple Chase Company. Thi warranty does not cover damage resulting from accident, misuse or abus or lack of reasonable care of the product. This warranty is in lieu of a other express warranties, obligations or liabilities. THE IMPLIED WARRANTIES OF MERCHANTABILITY AND FITNESS FOR A PARTICULAR PURPOSE ARE LIMITED TO A PERIOD FOR FIVE (5 YEARS FROM PURCHASE DATE. IN NO CASE SHALL MAPLE CHASE COMPANY BE LIABLE FOR ANY INCIDENTAL OR CONSEQUENTIAI DAMAGES FOR BREACH OF THIS OR ANY OTHER WARRANTY EXPRESS OR IMPLIED, WHATSOEVER, EVEN IF THE LOSS OF DAMAGE IS CAUSED BY ITS NEGLIGENCE OR FAULT.

10. FOR UNITS UNDER WARRANTY RETURN TO:

Return to Maple Chase Company in a well padded box. Ship it postage prepaid to:

MAPLE CHASE COMPANY
PRODUCT SERVICE DEPARTMENT
2820 Thatcher Road
Downers Grove, IL 60515-4040, U.S.A.

OR

MAPLE CHASE COMPANY OF CANADA
PRODUCT SERVICE DEPARTMENT
385 Watline Avenue
Mississauga, Ontario, Canada L4Z 1P

Section E
Pin and Sleeve

Index

Rating	Type	Page Number
Features and Benefits	**Watertight IEC Pin and Sleeve Devices**	E-3
16A, 110 - 415V AC	2P 3W, 3P 4W, 4P 5W	E-4
20A & 30A, 125 - 600V AC	2P 3W, 3P 4W, 4P 5W	E-4
32A, 110 - 415V AC	2P 3W, 3P 4W, 4P 5W	E-4
60A & 100A, 125 - 600V AC	2P 3W, 3P 4W, 4P 5W	E-5
63A & 125A, 220 - 415V AC	2P 3W, 3P 4W, 4P 5W	E-5
16A - 125A	**Watertight IEC Pin and Sleeve Accessories**	
20A - 125A	Back Boxes	E-6
16A - 32A	Straight and Angle Adapters	E-6
16A - 125A	Liquidtight Adapters	E-7
16A - 125A	Watertight Closure Caps, Cover Assembly Kits	E-7
16A - 125A	Locking Ring and Cord Clamp Kits	E-7
16A - 125A	**Watertight IEC Pin and Sleeve Dimensions**	
16A - 125A	Inlets, Connectors	E-8
16A - 125A	Plugs, Receptacles	E-9
16A - 125A	**Watertight IEC Pin and Sleeve Materials and Specifications**	
16A - 125A	Materials	E-10
16A - 125A	Specifications	E-11
Features and Benefits	**Low Profile IEC Pin and Sleeve Devices**	E-13
20A, 125 - 250V AC	3P 4W	E-14
30A & 60A, 125/250 - 250V AC	3P 4W	E-14
20A, 30A & 60A	**Low Profile IEC Pin and Sleeve Specifications and Dimensions**	
20A, 30A & 60A	Materials and Specifications	E-14
20A, 30A & 60A	Dimensions	E-15
Grounding Methods	**Watertight Insulgrip® Pin & Sleeve**	E-17
Features and Benefits	**Watertight Insulgrip® Pin & Sleeve**	E-18–21
30A, 60A, 100A & 200A	2P 3W, 3P 4W, 4P 5W and Catalog Numbering	E-22
30A, 60A, 100A & 200A	Back Boxes	E-23
30A, 60A, 100A	Cord Clamp Kits, Liquid Tight Adapters, Plugout	E-23
30A, 60A & 100A	**Watertight Insulgrip® Pin & Sleeve Dimensions and Specifications**	
30A, 60A & 100A	Dimensions	E-24
30A, 60A &100A	Materials	E-25
30A, 60A & 100A	Specifications	E-25
Features and Benefits	**Unfused IEC Circuit-Lock® Interlock Devices**	E-27
30A, 60A & 100A, 120 - 600V AC	2P 3W, 3P 4W, 4P 5W	E-28
30A, 60A & 100A	**Unfused IEC Circuit-Lock® Specifications and Dimensions**	
30A, 60A & 100A	Dimensions and Auxiliary Contacts	E-28
30A, 60A & 100A	Specifications	E-29
Features and Benefits	**Unfused IEC Circuit-Lock® Reverse Service Interlock Devices**	E-30
30A, 60A & 100A	3P 4W and Auxiliary Contacts	E-31
30A, 60A & 100A	Dimensions and Specifications	E-32
Features and Benefits	**Fused IEC Circuit-Lock® Safety Interlocks**	E-33
30A & 60A	3P 4W, 4P 5W and Auxiliary Contacts, Watertight Closure Plug	E-34
30A & 60A	Materials and Specifications	E-35
16A - 125A, 120 - 600V AC	Watertight IEC Pin and Sleeve Technical Information	E-36

Pin and Sleeve Watertight Devices

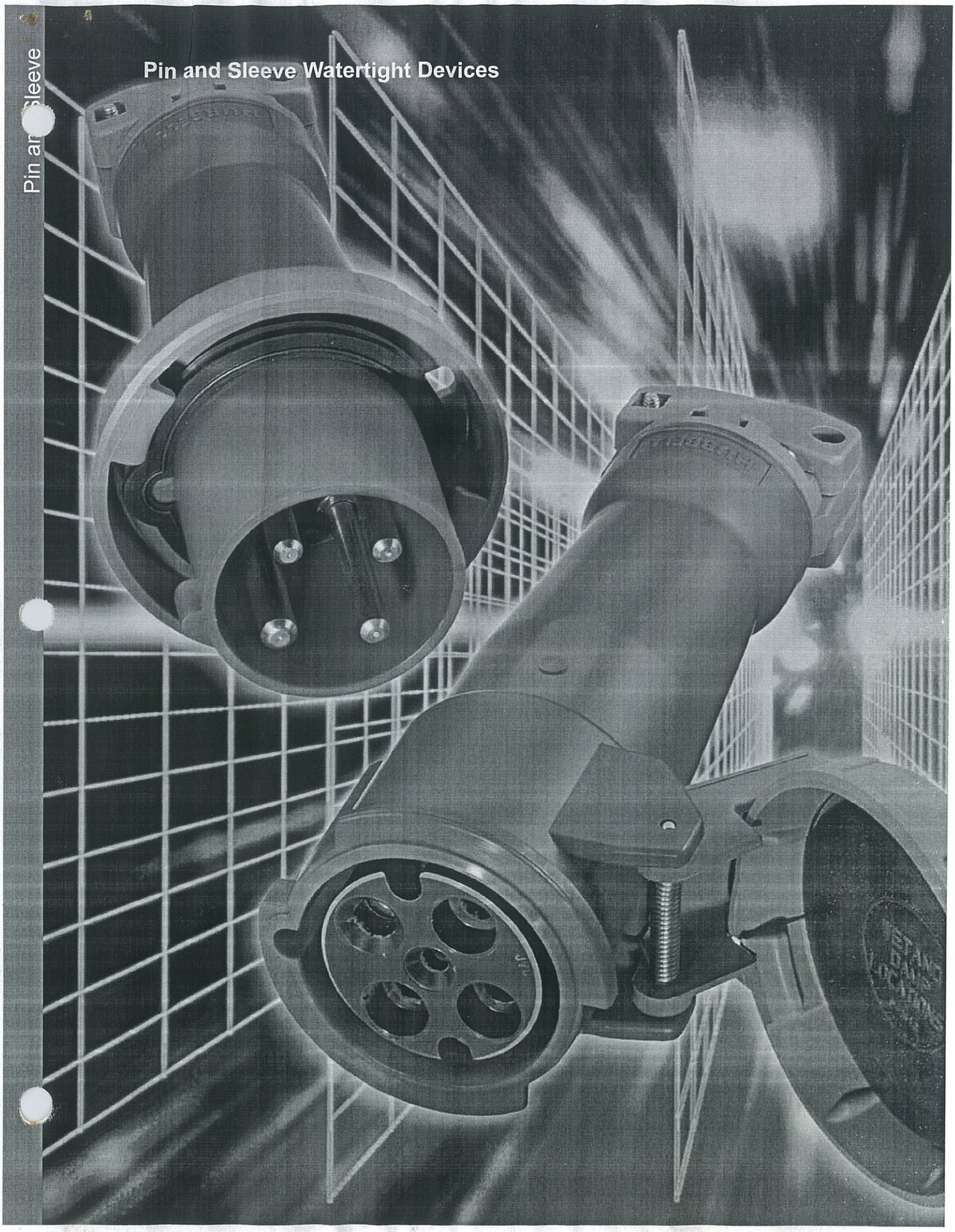

Pin and Sleeve
Watertight Devices
Features and Benefits

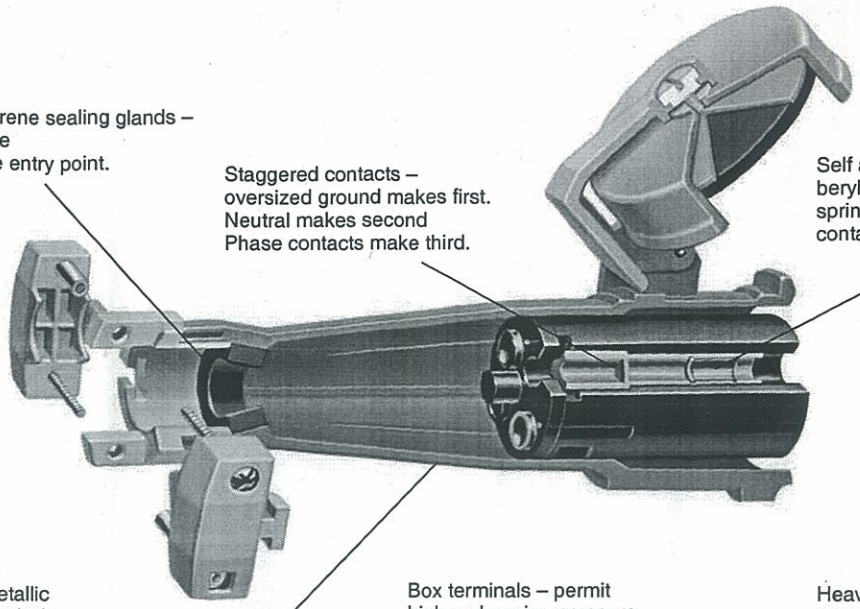

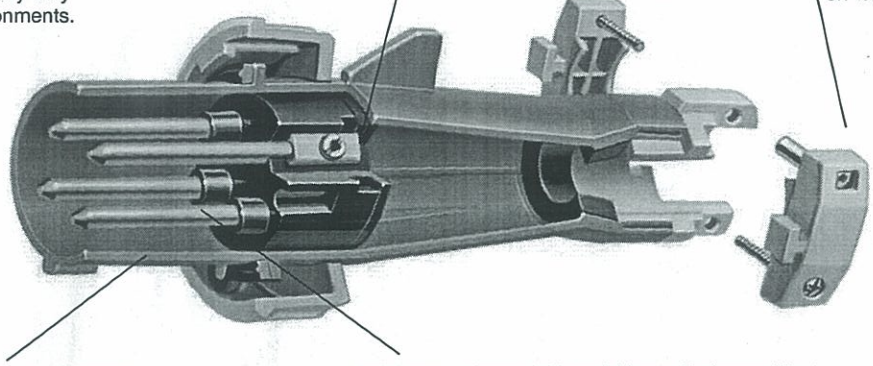

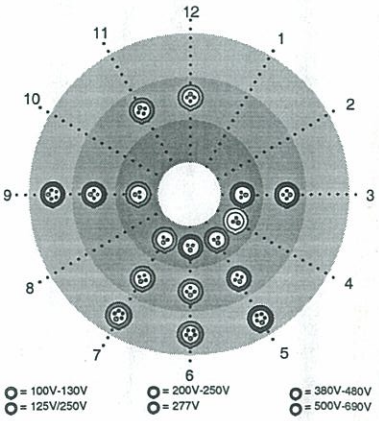

Singly Rated Configurations

Every non-metallic Hubbell Pin and Sleeve product is designed and manufactured to meet the International Standard IEC 60309-1 and IEC 60309-2. This device standard calls out a singly rated, non-interchangeable configuration for every voltage and type of service throughout the world.

Voltage

The voltage is determined by the location of the female ground contact relative to the housing key-way. Simply by manufacturing the device with a ground contact in a certain "clock" position, the device will be rated for a particular voltage system. The diagram shows the keying position and the color coding that is associated with each voltage.

Pin and Sleeve

Watertight Devices Ordering Information

20 and 30 Ampere – North American Ratings
16 and 32 Ampere – International Ratings

				IP67	Watertight Devices				Back Boxes			
											Replacement Interior Kits	
Amps	Poles and Wires	Configuration Recep./ Conn.	Plug/ Inlet	Voltage	Receptacle	Plug	Connector	Inlet	Nonmetallic	Metallic	Conn. Recep.	Plugs Inlets
16	2P 3W			100-130	HBL316R4W	HBL316P4W	HBL316C4W	HBL316B4W†	BB2030N	BB201W BB301W	IN320BF	IN320BM
	2P 3W			220-240	HBL316R6W	HBL316P6W	HBL316C6W	HBL316B6W	BB2030N	BB201W BB301W	IN320BF	IN320BM
	3P 4W			380-415	HBL416R6W	HBL416P6W	HBL416C6W	HBL416B6W†	BB2030N	BB201W BB301W	IN420DF	IN420DM
	4P 5W			220/380 240/415	HBL516R6W	HBL516P6W	HBL516C6W	HBL516B6W	BB2030N	BB201W BB301W	IN520EF†	IN520EM
20	2P 3W			125	HBL320R4W	HBL320P4W	HBL320C4W	HBL320B4W	BB2030N	BB201W BB301W	IN320AF	IN320AM
	2P 3W			250	HBL320R6W	HBL320P6W	HBL320C6W	HBL320B6W	BB2030N	BB201W BB301W	IN320BF	IN320BM
	2P 3W			480	HBL320R7W	HBL320P7W	HBL320C7W	HBL320B7W	BB2030N	BB201W BB301W	IN320BF	IN320BM
	3P 4W			125/250	HBL420R12W	HBL420P12W	HBL420C12W	HBL420B12W	BB2030N	BB201W BB301W	IN420CF	IN420CM
	3P 4W			3Ø250	HBL420R9W	HBL420P9W	HBL420C9W	HBL420B9W	BB2030N	BB201W BB301W	IN420DF	IN420DM
	3P 4W			3Ø480	HBL420R7W	HBL420P7W	HBL420C7W	HBL420B7W	BB2030N	BB201W BB301W	IN420DF	IN420DM
	3P 4W			3Ø600	HBL420R5W	HBL420P5W	HBL420C5W	HBL420B5W	BB2030N	BB201W BB301W	IN420DF	IN420DM
	4P 5W			3ØY120/208	HBL520R9W	HBL520P9W	HBL520C9W	HBL520B9W	BB2030N	BB201W BB301W	IN520EF†	IN520EM
	4P 5W			3ØY277/480	HBL520R7W	HBL520P7W	HBL520C7W	HBL520B7W	BB2030N	BB201W BB301W	IN520EF†	IN520EM
	4P 5W			3ØY347/600	HBL520R5W	HBL520P5W	HBL520C5W	HBL520B5W	BB2030N	BB201W BB301W	IN520EF†	IN520EM
30	2P 3W			125	HBL330R4W	HBL330P4W	HBL330C4W	HBL330B4W	BB2030N	BB201W BB301W	IN330AF	IN330AM
	2P 3W			250	HBL330R6W	HBL330P6W	HBL330C6W	HBL330B6W	BB2030N	BB201W BB301W	IN330BF	IN330BM
	2P 3W			480	HBL330R7W	HBL330P7W	HBL330C7W	HBL330B7W	BB2030N	BB201W BB301W	IN330BF	IN330BM
	3P 4W			125/250	HBL430R12W	HBL430P12W	HBL430C12W	HBL430B12W	BB2030N	BB201W BB301W	IN430CF	IN430CM
	3P 4W			3Ø250	HBL430R9W	HBL430P9W	HBL430C9W	HBL430B9W	BB2030N	BB201W BB301W	IN430DF	IN430DM
	3P 4W			3Ø480	HBL430R7W	HBL430P7W	HBL430C7W	HBL430B7W	BB2030N	BB201W BB301W	IN430DF	IN430DM
	3P 4W			3Ø600	HBL430R5W	HBL430P5W	HBL430C5W	HBL430B5W	BB2030N	BB201W BB301W	IN430DF	IN430DM
	4P 5W			3ØY120/208	HBL530R9W	HBL530P9W	HBL530C9W	HBL530B9W	BB2030N	BB201W BB301W	IN530EF	IN530EM
	4P 5W			3ØY277/480	HBL530R7W	HBL530P7W	HBL530C7W	HBL530B7W	BB2030N	BB201W BB301W	IN530EF	IN530EM
	4P 5W			3ØY347/600	HBL530R5W	HBL530P5W	HBL530C5W	HBL530B5W	BB2030N	BB201W BB301W	IN530EF	IN530EM
32	2P 3W			100-130	HBL332R4W†	HBL332P4W†	HBL332C4W†	HBL332B4W†	BB2030N	BB201W BB301W	IN330BF	IN330BM
	2P 3W			220-240	HBL332R6W	HBL332P6W	HBL332C6W	HBL332B6W	BB2030N	BB201W BB301W	IN330BF	IN330BM
	3P 4W			380-415	HBL432R6W	HBL432P6W	HBL432C6W	HBL432B6W	BB2030N	BB201W BB301W	IN430DF	IN430DM
	3P 4W			380V 50Hz 440V 60Hz	HBL432R3W	HBL432P3W	HBL432C3W	–	BB2030N	BB201W BB301W	IN430DF	IN430DM
	4P 5W			220/380 240/415	HBL532R6W	HBL532P6W	HBL532C6W	HBL532B6W	BB2030N	BB201W BB301W	IN530EF	IN530EM

Notes: See page E-6, E-7 for accessories. See page E-8, E-9 for product dimensions. See page E-10, E-11 for product specifications. Closure caps purchased separately, see page E-7.

† Consult factory.

Pin and Sleeve

Watertight Devices Ordering Information

60 and 100 Ampere – North American Ratings
63 and 125 Ampere – International Ratings

				IP67	Watertight Devices				Back Boxes		Replacement Interior Kits	
Amps	Poles and Wires	Configuration Recep./ Conn.	Plug/ Inlet	Voltage	Receptacle	Plug	Connector	Inlet	Nonmetallic	Metallic	Conn. Recep.	Plugs Inlets
60	2P 3W			125	HBL360R4W	HBL360P4W	HBL360C4W	HBL360B4W	BB60N	BB601W BB602W	IN360AF	IN360AM
	2P 3W			250	HBL360R6W	HBL360P6W	HBL360C6W	HBL360B6W	BB60N	BB601W BB602W	IN360BF	IN360BM†
	2P 3W			480	HBL360R7W	HBL360P7W	HBL360C7W	HBL360B7W	BB60N	BB601W BB602W	IN360BF	IN360BM†
	3P 4W			125/250	HBL460R12W	HBL460P12W	HBL460C12W	HBL460B12W	BB60N	BB601W BB602W	IN460CF	IN460CM
	3P 4W			3Ø250	HBL460R9W	HBL460P9W	HBL460C9W	HBL460B9W	BB60N	BB601W BB602W	IN460DF	IN460DM
	3P 4W			3Ø480	HBL460R7W	HBL460P7W	HBL460C7W	HBL460B7W	BB60N	BB601W BB602W	IN460DF	IN460DM
	3P 4W			3Ø600	HBL460R5W	HBL460P5W	HBL460C5W	HBL460B5W	BB60N	BB601W BB602W	IN460DF	IN460DM
	4P 5W			3ØY120/208	HBL560R9W	HBL560P9W	HBL560C9W	HBL560B9W	BB60N	BB601W BB602W	IN560EF	IN560EM†
	4P 5W			3ØY277/480	HBL560R7W	HBL560P7W	HBL560C7W	HBL560B7W	BB60N	BB601W BB602W	IN560EF	IN560EM†
	4P 5W			3ØY347/600	HBL560R5W	HBL560P5W	HBL560C5W	HBL560B5W	BB60N	BB601W BB602W	IN560EF	IN560EM†
63	2P 3W			220-240	HBL363R6W	HBL363P6W	HBL363C6W	HBL363B6W	BB60N	BB601W BB602W	IN360BFS	IN360BMS†
	3P 4W			380-415	HBL463R6W	HBL463P6W	HBL463C6W	HBL463B6W	BB60N	BB601W BB602W	IN460DFS	IN460DMS
	4P 5W			220/380 240/415	HBL563R6W	HBL563P6W	HBL563C6W	HBL563B6W	BB60N	BB601W BB602W	IN560EFS†	IN560EMS
100	2P 3W			125	HBL3100R4W	HBL3100P4W	HBL3100C4W	HBL3100B4W	BB100N	BB1001W BB1002W	IN3100AF	IN3100AM
	2P 3W			250	HBL3100R6W	HBL3100P6W	HBL3100C6W	HBL3100B6W	BB100N	BB1001W BB1002W	IN3100BF	IN3100BM†
	2P 3W			480	HBL3100R7W	HBL3100P7W	HBL3100C7W	HBL3100B7W	BB100N	BB1001W BB1002W	IN3100BF	IN3100BM†
	3P 4W			125/250	HBL4100R12W	HBL4100P12W	HBL4100C12W	HBL4100B12W	BB100N	BB1001W BB1002W	IN4100CF†	IN4100CM
	3P 4W			3Ø250	HBL4100R9W	HBL4100P9W	HBL4100C9W	HBL4100B9W	BB100N	BB1001W BB1002W	IN4100DF	IN4100DM
	3P 4W			3Ø480	HBL4100R7W	HBL4100P7W	HBL4100C7W	HBL4100B7W	BB100N	BB1001W BB1002W	IN4100DF	IN4100DM
	3P 4W			3Ø600	HBL4100R5W	HBL4100P5W	HBL4100C5W	HBL4100B5W	BB100N	BB1001W BB1002W	IN4100DF	IN4100DM
	4P 5W			3ØY120/208	HBL5100R9W	HBL5100P9W	HBL5100C9W	HBL5100B9W	BB100N	BB1001W BB1002W	IN5100EF	IN5100EM
	4P 5W			3ØY277/480	HBL5100R7W	HBL5100P7W	HBL5100C7W	HBL5100B7W	BB100N	BB1001W BB1002W	IN5100EF	IN5100EM
	4P 5W			3ØY347/600	HBL5100R5W	HBL5100P5W	HBL5100C5W	HBL5100B5W	BB100N	BB1001W BB1002W	IN5100EF	IN5100EM
125	2P 3W			220-240	HBL3125R6W	HBL3125P6W	HBL3125C6W	HBL3125B6W	BB100N	BB1001W BB1002W	IN3100BFS †	IN3100BMS †
	3P 4W			380-415	HBL4125R6W	HBL4125P6W	HBL4125C6W	HBL4125B6W	BB100N	BB1001W BB1002W	IN4100DFS	IN4100DMS
	4P 5W			220/380 240/415	HBL5125R6W	HBL5125P6W	HBL5125C6W	HBL5125B6W	BB100N	BB1001W BB1002W	IN5100EFS	IN5100EMS

Notes: 4- & 5-wire 63A and all 125A devices have pilot pins or contacts.
See page E-6, E-7 for accessories. See page E-8, E-9 for product dimensions. See page E-10, E-11 for product specifications.
Closure caps purchased separately, see page E-7.

† Consult factory.

Pin and Sleeve
Watertight Device Accessories

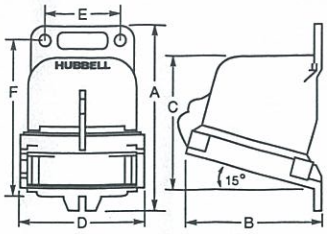

Non-Metallic Back Box

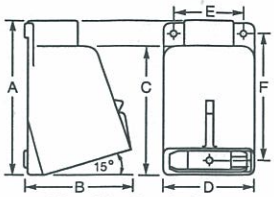

Metallic Angle Box

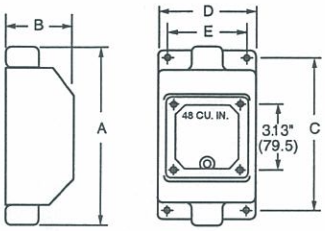

Metallic Feed-Thru Box

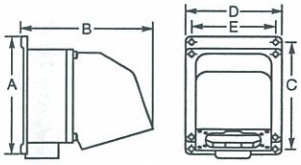

Metallic Four-Way Box

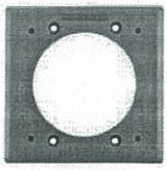
HBL2030AP

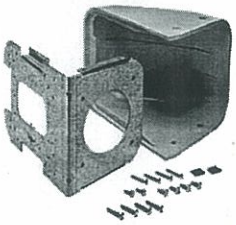
AA2030PS

Nonmetallic Back Box

Description	N.P.T. Hub Size	A Inch (mm)	B Inch (mm)	C Inch (mm)	D Inch (mm)	E Inch (mm)	F Inch (mm)	Cubic Inch Capacity	Catalog Numbers
Back box for 20 & 30A devices.	1" *	5.67 (144.0)	4.44 (112.8)	4.05 (102.9)	3.91 (99.3)	2.35 (59.7)	4.92 (125.0)	30	**BB2030N**
Back box for 60A devices.	1¼" **	7.76 (197.0)	5.16 (131.0)	5.87 (149.0)	4.72 (120.0)	2.99 (76.0)	6.94 (176.0)	70	**BB60N**
Back box for 100A devices.	1½" ***	8.21 (209.0)	6.23 (158.0)	6.31 (160.3)	5.71 (145.0)	3.99 (101.0)	7.41 (188.0)	120	**BB100N**

**Hub is not included; order one of the following Raco part numbers: *1" = 1704, **1¼" = 1705, ***1½" = 1706.*
These boxes meets IP 67 requirement and Type 4X requirements when installed with a watertight conduit hub.

Metallic Back Box

Description	N.P.T. Hub Size	A Inch (mm)	B Inch (mm)	C Inch (mm)	D Inch (mm)	E Inch (mm)	F Inch (mm)	Cubic Inch Capacity	Catalog Numbers
Back box for 16, 20, 30 & 32A devices.	¾"	5.12 (130.2)	4.00 (101.6)	4.19 (106.4)	3.75 (95.3)	3.00 (76.2)	4.00 (101.6)	30	**BB201W**
Back box for 16, 20, 30 & 32A devices.	1"	5.12 (130.2)	4.00 (101.6)	4.19 (106.4)	3.75 (95.3)	3.00 (76.2)	4.00 (101.6)	30	**BB301W**
Back box for 60A devices.	1¼"	7.25 (184.2)	5.25 (133.4)	6.00 (152.4)	4.50 (114.3)	3.75 (95.3)	6.19 (157.2)	80	**BB601W**
Back box for 60A devices.	1½"	7.25 (184.2)	5.25 (133.4)	6.00 (152.4)	4.50 (114.3)	3.75 (95.3)	6.19 (157.2)	80	**BB602W**
Back box for 100A devices.	1½"	8.12 (206.4)	6.75 (171.5)	6.88 (174.6)	5.50 (139.7)	4.75 (120.7)	6.94 (176.2)	130	**BB1001W**
Back box for 100A devices.	2"	8.12 (206.4)	6.75 (171.5)	6.88 (174.6)	5.50 (139.7)	4.75 (120.7)	6.94 (176.2)	130	**BB1002W**
Feed thru box for 16, 20, 30 & 32A devices.	¾"	8.25 (209.6)	3.06 (77.8)	7.14 (181.4)	4.50 (114.3)	3.75 (95.3)	–	48	**FT202W**
Feed thru box for 16, 20, 30 & 32A devices.	1"	8.25 (209.6)	3.06 (77.8)	7.14 (181.4)	4.50 (114.3)	3.75 (95.3)	–	48	**FT302W**
Four-way box for 60 & 100A devices.	1½"	8.75 (222.3)	9.75 (247.7)	7.75 (196.9)	6.75 (171.5)	6.00 (152.4)	–	210	**FW60100**

These boxes are cast aluminum, suitable for IP54 requirements and are finished with enamel paint. These boxes withstand a 500-hour salt spray test as well as UL rain tight and external icing test.

Straight Wall Box Adapter

Description	Catalog Numbers
Adapts 16, 20, 30 & 32A Watertight IEC Pin and Sleeve devices to two gang, device mount, FD boxes.	**HBL2030AP**

Angle Wall Box Adapter

Description	Catalog Numbers
Adapts 16, 20, 30 & 32A Watertight IEC Pin and Sleeve devices to standard wall boxes.	**AA2030PS**

Adapts 20 and 30A Watertight Pin and Sleeve receptacle To single, two gang standard wall box and 4" or 4 11/16" square.

Pin and Sleeve
Watertight Device Accessories

Closure Caps
Cap assemblies provide watertight sealing to a disconnected male IEC Pin and Sleeve plug or inlet. Manufactured out of the same tough non-metallic material as the watertight IEC Pin and Sleeve devices for corrosion and abuse resistance.

Description	Catalog Numbers
Fits all 20A 3 wire plugs and inlets.	PC320
Fits all 20A 4 wire plugs and inlets.	PC420
Fits all 20A 5 wire plugs and inlets.	PC520
Fits all 30A 3 and 4 wire plugs and inlets.	PC3430
Fits all 30A 5 wire plugs and inlets.	PC530
Fits all 60A plugs and inlets.	PC60
Fits all 100A plugs and inlets.	PC100

PC3430

Cover Assemblies
Replacement cover assemblies for use with watertight connector bodies and receptacles. Kit contains cover, arm assembly and installation tool.

Description	Catalog Numbers
Fits all 20A 3 wire watertight female devices.	CA320
Fits all 20A 4 wire watertight female devices.	CA420
Fits all 20A 5 wire watertight female devices.	CA520
Fits all 30A 3 and 4 wire watertight female devices.	CA3430
Fits all 30A 5 wire watertight female devices.	CA530
Fits all 60A watertight female devices.	CA60
Fits all 100A watertight female devices.	CA100

CA3430

Locking Ring and Cord Clamp
Replacement locking ring and cord clamp for use with IEC plug and connector.

Description	Catalog Numbers
Fits all 20A 3 wire plugs and connectors.	CC320
Fits all 20A 4 wire plugs and connectors.	CC420
Fits all 20A 5 wire plugs and connectors.	CC520†
Fits all 30A 3 and 4 wire plugs and connectors.	CC3430
Fits all 30A 5 wire plugs and connectors.	CC530†
Fits all 60A plugs and connectors.	CC60
Fits all 100A plugs and connectors.	CC100

CC3430

Liquidtight Adapters
Machined aluminum adapters are available to provide a means for attaching flexible liquidtight metal conduit to rear of a Hubbell Pin and Sleeve plug or connector. To install, remove cord grip and two gland cap screws. Use screws to attach adapter. Kellems® liquidtight conduit connectors are available to control arc of bend and to prevent conduit pull-out where vibration, motion or strain is present. These grips interface directly with Hubbell's liquidtight adapters and are available in a wide variety of N.P.T. sizes and configurations. Consult your local code grounding requirements before using liquidtight adapters.

Rating of Hubbell Pin & Sleeve Device	Liquidtight Conduit Size	Hubbell Liquidtight Adapter Cat. No.	Optional Kellems Liquidtight Conduit Grip Catalog Numbers
16 & 20 Amp	½" NPT	SAA12	074093402
3 & 4 Wire	¾" NPT	SAA34	074093403
16 & 20 Amp 5 Wire	½" NPT	SAB12	074093402
and 30 & 32 Amp	¾" NPT	SAB34	074093403
3 & 4 Wire	1" NPT	SAB100	074093404
30 & 32 Amp 5 Wire	¾" NPT	SAC34	074093403
30 & 32 Amp 5 Wire	1" NPT	SAC100	074093404
and 60 & 63 Amp (all)	1¼" NPT	SAC125	074093405
100 & 125 Amp (all)	1¼" NPT	SAD125	074093405
	1½" NPT	SAD150	074093406

† Consult factory

SAB34

Pin and Sleeve

Watertight Device Dimensions

Inlet

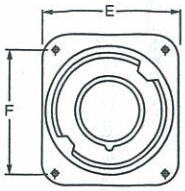

Inlet Dimensions

Type	A	B	C	D	E	F
HBL320B	2.54" (64.5)	1.85" (47.0)	1.14" (29.0)	2.72" (69.0)	3.75" (95.3)	3.13" (79.5)
HBL420B	2.54" (64.5)	2.11" (53.6)	1.14" (29.0)	2.72" (69.0)	3.75" (95.3)	3.13" (79.5)
HBL520B	2.54" (64.5)	2.41" (61.2)	1.14" (29.0)	2.72" (69.0)	3.75" (95.3)	3.13" (79.5)
HBL330B	2.99" (76.0)	2.49" (63.2)	1.04" (26.5)	2.72" (69.0)	3.75" (95.3)	3.13" (79.5)
HBL430B	2.99" (76.0)	2.49" (63.2)	1.04" (26.5)	2.72" (69.0)	3.75" (95.3)	3.13" (79.5)
HBL530B	2.99" (76.0)	2.75" (69.9)	1.04" (26.5)	2.80" (71.0)	3.75" (95.3)	3.13" (79.5)
HBL360B, HBL460B, HBL560B	4.04" (102.6)	2.97" (75.5)	1.18" (30.0)	3.46" (88.0)	4.50" (114.3)	3.88" (98.5)
HBL3100B, HBL4100B, HBL5100B	4.53" (115)	3.44" (87.5)	1.95" (49.5)	3.94" (100.0)	5.50" (139.7)	4.88" (124.0)

Connector Body

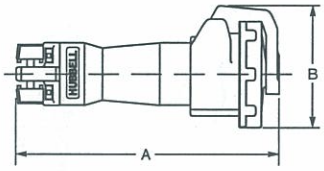

Connector Body Dimensions

Type	A	B	Cord Grip Range
HBL320C	7.49" (190.3)	3.33" (84.6)	.330"-.830" (8.4-21.1)
HBL420C	7.90" (200.6)	3.66" (93.0)	.375"-1.250" (9.5-31.8)
HBL520C	8.54" (216.9)	3.94" (100.0)	.375"-1.250" (9.5-31.8)
HBL330C	9.05" (229.9)	4.27" (108.5)	.375"-1.250" (9.5-31.8)
HBL430C	9.05" (229.9)	4.27" (108.5)	.375"-1.250" (9.5-31.8)
HBL530C	9.68" (245.8)	4.70" (119.5)	.500"-1.450" (12.7-36.8)
HBL360C, HBL460C, HBL560C	11.15" (283.2)	5.10" (129.5)	.500"-1.450" (12.7-36.8)
HBL3100C, HBL4100C, HBL5100C	13.57" (344.7)	5.71" (145)	1.065"-1.940" (27.1-49.3)

Note: 20, 30, 60 and 100A devices are dimensionally equivalent to 16, 32, 63 and 125A devices, respectively.

Pin and Sleeve
Watertight Device Dimensions

Plug Dimensions

Type	A	B	Cord Grip Range
HBL320P	6.61" (167.8)	2.87" (73.0)	.330"-.830" (8.4-21.1)
HBL420P	7.00" (177.8)	3.19" (81.0)	.375"-1.250" (9.5-31.8)
HBL520P	7.65" (194.3)	3.50" (89.0)	.375"-1.250" (9.5-31.8)
HBL330P	8.05" (204.5)	3.74" (95.0)	.375"-1.250" (9.5-31.8)
HBL430P	8.05" (204.5)	3.74" (95.0)	.375"-1.250" (9.5-31.8)
HBL530P	8.54" (216.9)	4.02" (102.0)	.500"-1.450" (12.7-36.8)
HBL360P, HBL460P, HBL560P	10.15" (257.8)	4.49" (114.0)	.500"-1.450" (12.7-36.8)
HBL3100P, HBL4100P, HBL5100P	12.63" (320.8)	4.92" (125.0)	1.065"-1.940" (27.1-49.3)

Plug

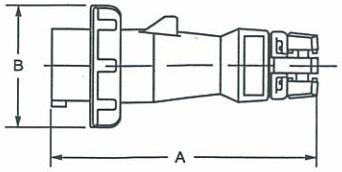

Receptacle Dimensions

Type	A	B	C	D	E	F
HBL320R	3.33" (84.5)	2.78" (70.6)	1.02" (26.0)	2.72" (69.0)	3.75" (95.3)	3.13" (79.5)
HBL420R	3.66" (93.0)	2.78" (70.6)	1.02" (26.0)	2.72" (69.0)	3.75" (95.3)	3.13" (79.5)
HBL520R	3.94" (100.0)	2.78" (70.6)	1.02" (26.0)	2.72" (69.0)	3.75" (95.3)	3.13" (79.5)
HBL330R	4.27" (108.5)	3.09" (78.5)	1.16" (29.5)	2.72" (69.0)	3.75" (95.3)	3.13" (79.5)
HBL430R	4.27" (108.5)	3.09" (78.5)	1.16" (29.5)	2.72" (69.0)	3.75" (95.3)	3.13" (79.5)
HBL530R	4.70" (119.4)	3.09" (78.5)	1.16" (29.5)	2.83" (71.9)	3.75" (95.3)	3.13" (79.5)
HBL360R, HBL460R, HBL560R	5.71" (145)	4.23" (107.4)	1.69" (43.0)	3.46" (88.0)	4.50" (114.3)	3.88" (98.6)
HBL3100R, HBL4100R, HBL5100R	5.71" (145)	4.23" (107.4)	2.46" (62.5)	3.94" (100.0)	5.50" (139.7)	4.88" (123.9)

Note: 20, 30, 60 and 100A devices are dimensionally equivalent to 16, 32, 63 and 125A devices, respectively.

Receptacle

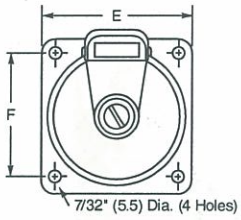

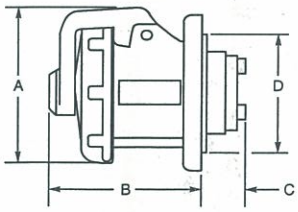

Pin and Sleeve

Watertight Listings

IEC Pin and Sleeve Inlet, Connector Body, Plug and Receptacle

Listed to UL Standard 1682

Certified to CSA Standard C22.2 number 182.1 (Industrial-type, Special-use Attachment Plugs, Receptacles and Connectors).

UL Classified to IEC Standards 60309-1 and 60309-2 (Plugs, Socket Outlets, and Couplers for Industrial Purposes) for both Series I (European) and Series II (North American) rated voltages and services.

When used with cord, these devices require no further investigation by UL for equipment Classification to IEC 435 or IEC 380.

Watertight Materials

Part	Material
Inlet	
Housing	Zytel® 101 Nylon
Locking Ring	Rynite® SST35
Mounting Flange	Zytel 101 Nylon
Mounting Screws	Stainless Steel (300 Series)
Contact Carrier	High-Impact Thermoset
Retainer	High-Impact Thermoset
Ground, Phase Pins	Brass
Terminal Screws	Stainless Steel (300 Series)
Assembly Screws (2)	Stainless Steel (300 Series)
Gaskets	Solid Neoprene
Connector Body	
Housings	Zytel ST801 Nylon
Cord Clamps	Rynite SST35
Glands	Solid Neoprene
Cover Arms	Rynite SST35
Arm Springs	Stainless Steel (17-7 type)
Covers	Rynite SST35
Cover Screw	Nickel-plated brass
Rotating Sealing Disc	Polycarbonate
Gaskets	Solid Neoprene
Contact Carrier	High-Impact Thermoset
Retainer	High-Impact Thermoset
Phase, Ground Sleeves	Brass
Sleeve Spring	20A and 30A Stainless Steel (300 Series); others are Beryllium Copper multi-contact inserts w/silver plating
Terminal Screws	Stainless Steel (300 Series)
Assembly Screws	Stainless Steel (300 Series)
Plug	
Housing	Zytel ST801 Nylon
Locking Ring	Rynite SST35
Sealing Gasket	Solid Neoprene
Cord Clamp	Rynite SST35
Gland Cap	Rynite SST35
Gland	Solid Neoprene
Cord Clamp Screws	Stainless Steel (300 Series)
Clamp Nut	Nickel-plated Brass
Gland Clamp Screws	Stainless Steel (300 Series)
Contact Carrier	High-Impact Thermoset
Retainer	High-Impact Thermoset
Ground, Phase Pins	Brass
Terminal Screws	Stainless Steel (300 Series)
Assembly Screws	Stainless Steel (300 Series)
Receptacle	
Housings	Zytel 101 Nylon
Mounting Flange	Zytel 101 Nylon
Arm Spring	Stainless Steel (17-7 type)
Cover Arm	Rynite SST35
Cover	Rynite SST35
Cover Screw	Nickel-plated brass
Rotating Sealing Disc	Polycarbonate
Gaskets	Solid Neoprene
Mounting Screws	Stainless Steel (300 Series)
Terminal Screws	Stainless Steel (300 Series)
Phase, Ground Sleeves	Brass
Sleeve Spring	20A and 30A Stainless Steel (300 Series); others are Beryllium Copper multi-contact inserts w/silver plating

® Zytel and Rynite are registered trademarks of Dupont.

Pin and Sleeve
Watertight Specification

Specifications

Typical Specification	
Manufacturer's Identification	Hubbell HBL520P9W.
Description	Plug, Power Supply.
Type	3 Pole + Neutral + Earth.
Rating	20A, 120/208V AC, 3 Phase WYE.
Configuration	UL 1686 C2, IEC 309-2, Clock Position 9, Watertight.
Certification	UL Listed, File E146032 Receptacles & Inlets, E146033 Plugs & Connectors, UL Standard UL1682 & UL 1686C2, CSA Certified File LR280C for Plugs, Connectors Inlets and LR285C for Receptacle CSA Standard C22.2 No. 182.1, UL Classified to IEC 60309-1 IEC 60309-2.

Performance

Electrical	
Dielectric Withstand Voltage	3000V AC.
Max. Working Voltage	600V RMS (i.e., minimum creepage distance 10 millimeters, minimum clearance 8 millimeters, per IEC 60309-1 for devices rated over 500V).
Current Interrupting	Certified for current interrupting at full rated current.
Temperature Rise	Max. 30°C temperature rise at full rated current after 50 cycles of overload at 150% of rated current at a power factor of 75%.
Endurance	5,000 connect and disconnect cycles with load for 16A and 20A, 1,000 cycles with load and 1,000 cycles w/o load for 30A, 32A, 60A and 63A, and 250 cycles with load and 250 cycles w/o load for 100A and 125A.

Mechanical	
Impact Resistance	Per CSA C22.2 No. 182.1 / UL1682.
Cord Grip Cable Retention	Per CSA C22.2 No. 182.1 / UL1682.
Cord Accommodation	Round portable service cords of diameters commensurate with the device rating as defined in UL Standard 62, CSA C22.2 No. 49 and the harmonized <HAR> European Standards.
Terminal Identification	Terminals identified in accordance with North American and IEC conventions.
Product Identification	Identification and ratings are a permanent part of the device housing.

Environmental	
Moisture Resistance	Watertight per IEC 309-1, IP67.
Flammability	HB or better per UL 94 or CSA C22.2 No. 0.17.
Operating Temperatures	Maximum Continuous 75° C; Minimum - 40°C w/o impact.

Materials	
Housings	Nylon per Mil Spec. 22096.
All other materials	Resistant to corrosion and chemical attack (per tabulation on this page).

Note: Specification sheets for all other Pin and Sleeve catalog numbers are available upon request.

Watertight Application Guide

Industry	Watertight
Agriculture	Outdoor for fans, heaters, pumps, etc.
Chemical Processing	Where subject to water, corrosion and rough use.
Construction	Outdoors subject to severe weather conditions.
Entertainment	Outdoors subject to severe weather.
Food Processing	Where subject to water, corrosion and rough use.
Food Service	Areas subject to wash downs & heavy cleaning.
Light Manufacturing	Subjected to cleaning, solvents & chemicals.
Manufacturing	Where subject to water, corrosion and rough use (i.e., mills).
Military	Outdoor construction or maintenance subject to severe weather.

Pin & Sleeve Devices

Technical Information

Catalog Number Explanation
Terminal Identification

■ Typical IEC Pin and Sleeve Catalog Number

HBL4100C12-W

4 100 C 12 W

- 4 — 4 Wire
- 100 — 100 Amp
- C — "C" Connector
- 12 — Ground Sleeve @ "12" O'Clock (125/250V)
- W — Watertight™

Explanation

1 First Digit
3-3 wire
4-4 wire
5-5 wire

2 Next Series Of Digits
Preceding a letter
20-20 Amp
30-30 Amp
60-60 Amp
100-100 Amp

3 Letter
P-Plug
R-Receptacle
C-Connector
B-Inlet
MI-Mechanical Interlock
MIF-Mechanical Interlock Fused

4 Last Digit(s)
After the letter.
This denotes the position of the ground sleeve and the assigned voltage in the receptacle as it relates to the hours of the clock. This is done to eliminate interchangeability between devices with different voltages.

5 Letter: W
Watertight

■ IEC Pin and Sleeve Terminal Identification - Rear View

Description	Rating: Domestic	Rating: International	Terminal Marking Pattern: Receptacle & Connector	Terminal Marking Pattern: Plug & Inlet
3 wire	125V AC 277V AC	110V AC	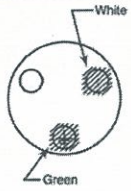	
3 wire	250V AC 480V AC 600V AC	240V AC 380-415V AC		
4 wire	125/250V AC			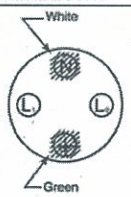
4 wire	(3Ø ³) 250V AC 480V AC 600V AC	380-415V AC	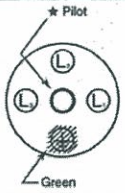	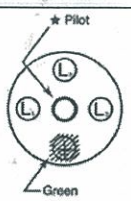
5 wire	(3ØY) 120/208V AC 277/480V AC 347/600V AC	220/380V AC 240/415V AC 50/600V AC, 50-600V AC, 400 Hz	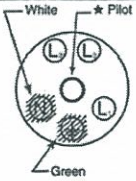	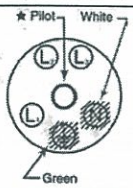

★ *Pilot contacts supplied on 4 & 5W 63 & 125 Amp international rated devices.*
Note: For Insulgrip Pin & Sleeve catalog number explanation, see page E-17.

4

016 Series Fiesta Indicators

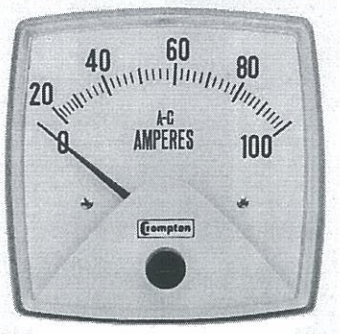

A range of shortscale and longscale panel meters. Their rugged design will suit demanding environmental applications.

Features

- ***Dust and water jet protected to IP55 (NEMA4 IEC529)***
- ***Withstands high levels of shock, vibration, dirt and humidity***
- ***The contoured window gives an exceptionally wide viewing angle***
- ***Complies with ANSI-C39 (IEC 51)***
- ***UL approval for short scale Ammeters, Voltmeters, Frequency Meters and Elapsed Time meters on selected ranges. File Number E87815***
- ***Instruments comply with BSEN61010-1 meets IEC414 (BS5458) Dielectric Test (2600V for 1 min)***

Options

On request the following are available:

- ***Supplementary Pointer***
- ***Non Reflecting Window***
- ***Heavily Damped Movement***
- ***Panel Gasket***
- ***Clamp Band Fixing long scale***
- ***Coloured Internal Gasket***

Elapsed Time Meter and Frequency Meter

Voltage:	100/125V, 200/250V or 480V A.C.	**Temperature:**	
Frequency:	50Hz or 60Hz	Range:	-20°C to 65°C (-4°F to 149°F)
Burden:	4VA Maximum	Storage:	-30°C to 70°C (-22°F to 158°F)

Iron Vane A.C. Ammeter & Voltmeter

Accuracy:	Shortscale: ammeters 2.5%; Longscale: 1.5 %	**Burden:**	
Ratings:		Ammeters:	shortscale 0.5VA; long scale 1.5VA
Ammeters:	Shortscale 1 to 80A Longscale 1 to 20A	Voltmeters:	4.5VA maximum
Voltmeters:	10V to 600V	**Temperature:**	
Overload:		Range:	-20°C to 65°C (-4°F to 149°F)
Ammeters:	x1.2 for 2 hours 10 x for 5 seconds	Storage:	-30°C to 70°C (-22°F to 158°F)
Voltmeters:	x1.2 for 2 hours 2 x for 5 seconds		

Moving Coil D.C. Ammeter & Voltmeter

Accuracy Class:	Shortscale 1.5; longscale 1.5	**Impedance:**	Voltmeters 1000 ohms per Volt nominal
Ratings:		**Temperature:**	
Ammeters:	200µA to 30A (100µA shortscale)	Range:	-20°C to 65°C (-4°F to 149°F)
Voltmeters:	50mV to 600V	Storage:	-30°C to 70°C (-22°F to 158°F)
Overload:			
Ammeters:	x1.2 for 2 hours 10 x for 5 seconds		
Voltmeters:	x1.2 for 2 hours 2 x for 5 seconds		

Dimensions

x = Terminals
1/4 - 28 UNF up to 59.9A 0.72" long.
5/16 - 24UNF over 60A 0.94" long.

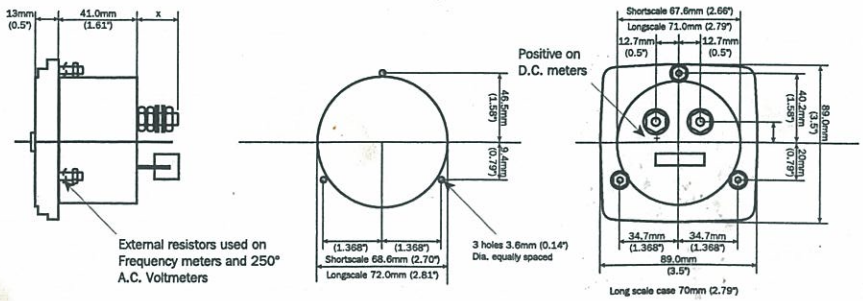

Crompton INSTRUMENTS

Analogue Instruments

016 Series Fiesta Indicators

A.C. Ammeter

A.C. Voltmeter

D.C. Voltmeter

Rating	Scaling*	Short Scale Catalogue No.	Long Scale Catalogue No.
A.C. Ammeter True RMS Reading - Self Contained 40/70Hz			
5A	0-5a	• 016-02A*-LSLS	016-03A*-LSLS
10A	0-10a	016-02A*-MTMT	016-03A*-MTMT
15A	0-15a	016-02A*-NDND	016-03A*-NDND
20A	0-20a	016-02A*-NGNG	016-03A*-NGNG
30A	0-30a	016-02A*-NLNL	016-03A*-NLNL
5A	Transformer Rated	• 016-02A*-LS**	016-03A*-LS**
A.C. Ammeters - Moving Coil Rectified			
100µA to 1A	To Suit	016-01B*-	016-05B*-
A.C. Voltmeter True RMS Reading			
150v	0-150V	• 016-02V*-PZPZ	016-03V*-PZPZ
300v	0-300V	• 016-02V*-RXRX	016-03V*-RXRX
600v	0-600V	• 016-02V*-SJSJ	016-03V*-SJSJ
150V	Transformer Rated	• 016-02V*-PZ**	016-03V*-PZ**
A.C. Voltmeters - Moving Coil Rectified			
15V to 600V	To suit	016-01W*-	016-05W*-
D.C. Ammeters			
0-50mV	To Suit Requirements	016-01A*-EC**	016-05A*-EC**
0-1mA	To Suit Requirements	• 016-01A*-FA**	016-05A*-FA**
0-5mA	To Suit Requirements	016-01A*-FX**	016-05A*-FX**
0-10mA	To Suit Requirements	016-01A*-HA**	016-05A*-HA**
0-20mA	To Suit Requirements	• 016-01A*-HF**	016-05A*-HF**
Milliammeters Suppressed Zero - No zero set unless specified			
4/20mA	To Suit Requirements	• 016-01RA*-HG**	016-05RA-HG**
Voltage Suppressed Zero - No zero set unless specified			
1-5V	To Suit	016-01S*-LM	016-05S*-LM
D.C. Voltmeters Sensitivity 1000Ω/Volt			
0-15V	0-15V	016-01V*-NDND	016-05V*-NDND
0-30V	0-30V	016-01V*-NLNL	016-05V*-NLNL
0-50V	0-50V	• 016-01V*-NTNT	016-05V*-NTNT
0-150V	0-150V	• 016-01V*-PZPZ	016-05V*-PZPZ
0-300V	0-300V	• 016-01V*-RXRX	016-05V*-RXRX
0-600V	0-600V	016-01V*-SJSJ	016-05V*-SJSJ

* Please state A or B at time of ordering. A = ANSI B = BS89
** Customer to state required scaling at time of ordering
• UL recognised

Crompton INSTRUMENTS

016 Series Fiesta Indicators

Frequency Meter

Elapsed Time Meter

Rating	Scaling*	Short Scale Catalogue No.	Long Scale Catalogue No.

Frequency Meters 120V* - Self Contained

Rating	Scaling*	Shortscale Catalogue No.	Longscale Catalogue No.

Frequency Meters 120V* - Self Contained

		Standard Case	
50Hz Centre Frequency, -0.15 Accuracy	45-55Hz	• 016-41S*-PNAG-AG	
50Hz Centre Frequency, -0.25 Accuracy	45-65Hz	• 016-41S*-PNAJ-AJ	Use 016-053 plus 253-THZ
60Hz Centre Frequency, -0.15 Accuracy	55-65Hz	• 016-41S*-PNAN-AN	
400Hz Centre Frequency, -1.25 Accuracy	360-440Hz	016-41S*-PNBI-BI	

Elapsed Time Meters 99999.99 hours - non reset

		Standard Case	
110/130V, 50Hz	-	• 016-155A*-PNZH-C5	
200/250V, 50Hz	-	• 016-155A*-RNZH-C5	
480V, 50Hz	-	016-155A*-SEZH-C5	
110/130V, 60Hz	-	• 016-156A*-PNZH-C6	
200/250V, 60Hz	-	• 016-156A*-RNZH-C6	
480V, 60Hz	-	016-156A*-SEZH-C6	

Maximum Demand Ammeter

15 minute time lag	To Suit	016-16A*	

Transducer Indicators D.C. Milliamp Rated

Speed	To Suit	016-012*	016-052
Frequency	To Suit	016-013*	016-053
Phase Angle	To Suit	016-014*	016-054
Watts	To Suit	016-015*	016-055
VArs	To Suit	016-016*	016-056
VA	To Suit	016-017*	016-057

* Please state A or B at time of ordering. A = ANSI B = BS89
** Customer to state required scaling at time of ordering
• UL recognised

Crompton INSTRUMENTS

Analogue Instruments

Ref: IW012346 – Rev 4 – July 03

Analogue Instruments
Panel Indicators Saxon & Fiesta Series

Products Covered

012-**, 013-**, 014-** & 016-**

Installation

The product should be panel mounted using the mounting kit provided. Consideration should be given to the space required behind the unit to allow for bends in the connecting cables. Additional protection to the panel may be obtained by the use of an optional panel gasket. The terminals at the rear of the case should be protected from liquids. Units should be mounted in a reasonably stable ambient temperature.

The unit should not be mounted where it can be subjected to excessive direct sunlight and vibration should be kept to a minimum. Connection wires should be sized to comply with local regulations and should be terminated on to tags suitable for screw connection. The products do not have internal fuses therefore; external fuses **must** be used for safety protection under fault conditions.

Electromagnetic Compatibility (EMC) Installation Requirements

This product range has been designed to meet the certification requirements of the EU Directives when installed to a good code of practice for EMC in industrial environments. e.g.

1. Screen all leads. In the event of RF fields causing problems where screened leads can not be used, provision for fitting RF suppression components, such as ferrite absorbers, line filters etc., must be made. N.B. It is good practice to install sensitive electronic instruments that are performing critical functions, in EMC enclosures that protect against electrical interference causing a disturbance in function.

2. Avoid routing leads alongside cables and products that are, or could be, a source of interference.

3. To protect the product against permanent damage, surge transients must be limited to 2kV pk.

4. Electro Static Discharge (ESD) precautions must be taken at all times when handling this product.

For assistance on protection requirements please contact your local sales office.

Low Voltage Directive: This product complies with BSEN61010-1.

Saxon & Fiesta Series

Where models have different terminal markings all options are illustrated. Voltage circuits should be fused. When practical, instrument circuits should be earthed at one point. C.Ts must not be open circuited on load.

Indoor Use

Altitude up to 2000m or above 2000m if specified by the manufacturer.

Temperature 0 to 40°C;
Maximum relative humidity 80% for temperatures up to 31°C decreasing linearly to 50% relative humidity at 40°C;

Mains supply voltage fluctuations not to exceed + 10% of the nominal voltage;

Other supply voltage fluctuations as stated by the manufacturer;

Transient overvoltages according to INSTALLATION CATEGORIES (OVERVOLTAGE CATEGORIES) I, II and III (see Annex J). For mains supply the minimum and normal category is II;

POLLUTION DEGREE 1 or 2 in accordance with IEC 664.

Ref: IW012346 – Rev 4 – July 03

INSTALLATION INSTRUCTIONS

Analogue Instruments
Panel Indicators Saxon & Fiesta Series

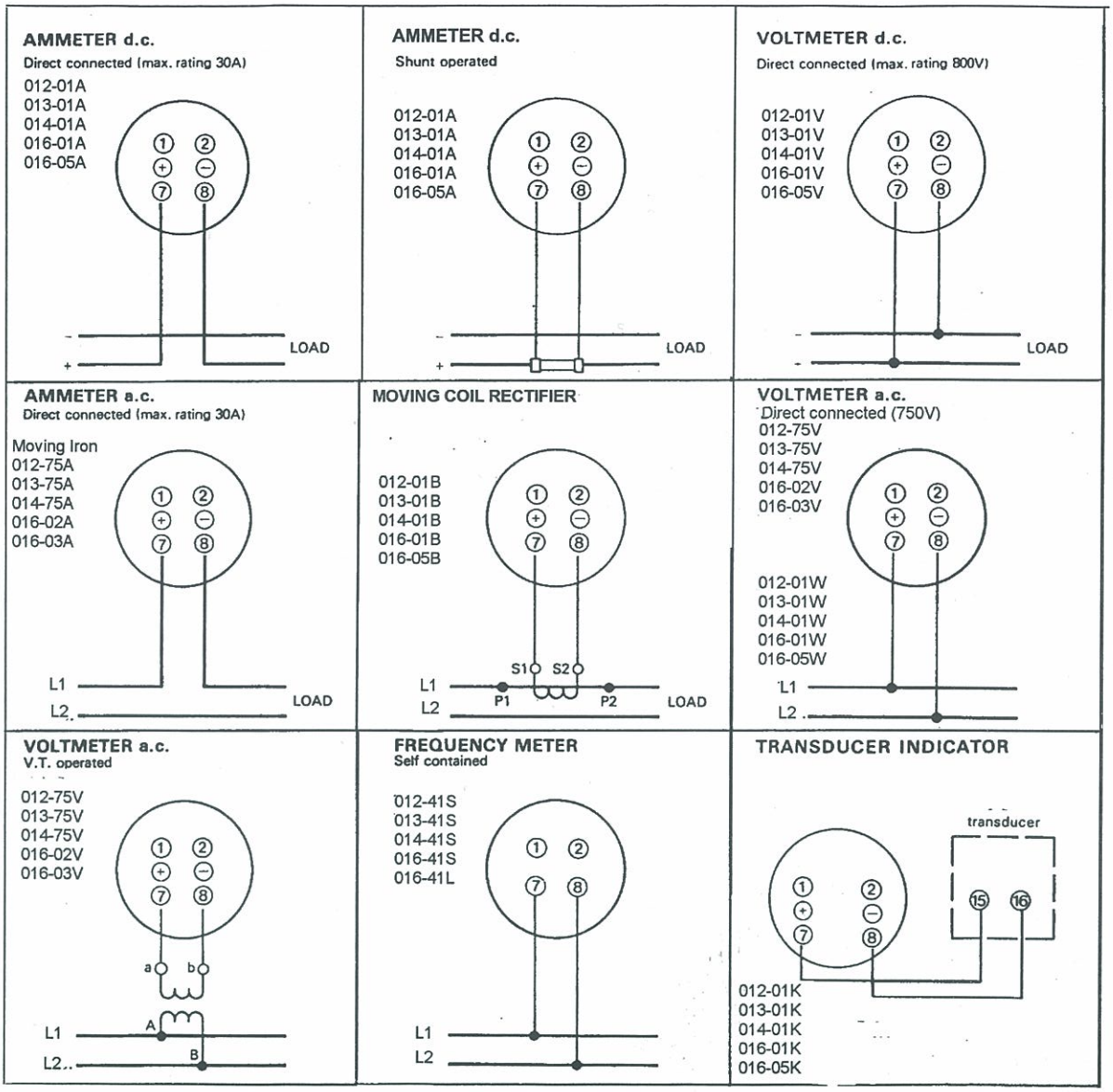

The Information contained in these installation instructions is for use only by installers trained to make electrical power installations and is intended to describe the correct method of installation for this product. However, Tyco Electronics has no control over the field conditions, which influence product installation.
It is the user's responsibility to determine the suitability of the installation method in the user's field conditions. Tyco Electronics' only obligations are those in Tyco Electronics' standard Conditions of Sale for this product and in no case will Tyco Electronics be liable for any other incidental, indirect or consequential damages arising from the use or misuse of the products. Crompton is a trademark.

Tyco Electronics UK Limited
Crompton Instruments
Freebournes Road, Witham, Essex, CM8 3AH, UK
Phone: +44 1376 509 509 Fax: +44 1376 509 511
http://energy.tycoelectronics.com

Ref: IW05678 – Rev 4 – Sept 02

Products Covered

056-** 057-** 058-** *= Any letter or number

Analogue Instruments

Panel Indicators 050 Unifix Series

Installation

The product should be panel mounted using the Clamp Band provided. Consideration should be given to the space required behind the unit to allow for bends in the connecting cables. Additional protection to the panel may be obtained by the use of an optional panel gasket. The terminals at the rear of the case should be protected from liquids. Units should be mounted in a reasonably stable ambient temperature and within the range -10 to +60°C.

The unit should not be mounted where it is subjected to excessive direct sunlight and vibration should be kept to a minimum. Connection wires should be sized to comply with local regulations and should be terminated in tags suitable for screw connection. The products do not have internal fuses therefore external fuses **must** be used for safety protection under fault conditions.

Fusing and connections

1. This unit must be fitted with external fuses in voltage and auxiliary supply lines.
2. Voltage input lines must be fused with a quick blow fuse 1A maximum.
3. Auxiliary supply lines must be fused with a slow blow fuse rated 1A maximum.
4. Choose fuses of a type and with a breaking capacity appropriate to the supply and in accordance with local regulations.
5. Where fitted, CT secondaries must be grounded in accordance with local regulations.

Warning

- During normal operation, voltages hazardous to life may be present at some of the terminals of this unit. Installation and servicing should be performed only by qualified, properly trained personnel' abiding by local regulations. Ensure all supplies are de-energised before attempting connection or other procedures.
- It is recommended adjustments be made with the supplies de-energised, but if this is not possible, then extreme caution should be exercised.
- Terminals should not be user accessible after installation and external installation provisions must be sufficient to prevent hazards under fault conditions.
- This unit is not intended to function as part of a system providing the sole means of fault protection - good engineering practice dictates that any critical function be protected by at least two independent and diverse means.
- Never open circuit the secondary winding of an energised current transformer.

Electromagnetic Compatibility

This unit has been designed to provide protection against EM (electro-magnetic) interference in line with requirements of EU and other regulations. Precautions necessary to provide proper operation of this and adjacent equipment will be installation dependent and so the following can only be general guidance:-

- Avoid routing wiring to this unit alongside cables and products that are, or could be, a source of interference.
- The auxiliary supply to the unit should not be subject to excessive interference. In some cases, a supply line filter may be required.
- To protect the product against incorrect operation or permanent damage, surge transients must be controlled. It is good EMC practice to suppress differential surges to 2kV or less at the source. The unit has been designed to automatically recover from typical transients, however in extreme circumstances it may be necessary to temporarily disconnect the auxiliary supply for a period of greater than 5 seconds to restore correct operation.
- Screened communication and small signal leads are recommended and may be required. These and other connecting leads may require the fitting of RF suppression components, such as ferrite absorbers, line filters etc., if RF fields cause problems.

It is good practice to install sensitive electronic instruments that are performing critical functions in EMC enclosures that protect against electrical interference causing a disturbance in function.

Meter Relay 057-30* Circuit Connections

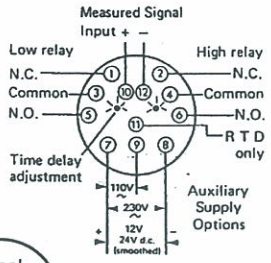

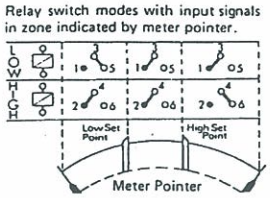

Panel Cut-out 65 dia.

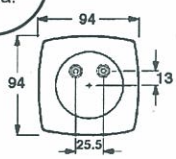

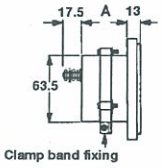

Terminals are 1/4 - 28 UNF.
Elapsed Time Meters have screw type terminals at seven O'clock at rear of case.

Panel Cut-out 65 dia.

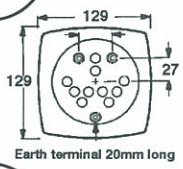

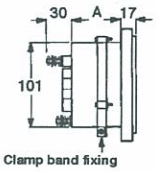

Terminals are 10-32 UNF. Case length 'A' Instruments use case length 56mm except MDI 86mm and combined MDI and MI ammeter 132mm.

Panel Cut-out 65 dia.

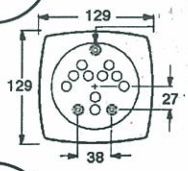

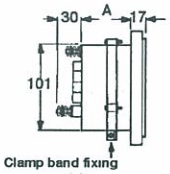

Terminals are 10-32 UNF. Case length 'B' all ammeters, voltmeters, transducer indicators and meter relays use case length 86mm. Self contained Frequency, Watt, Var, Power Factor Meters, Synchroscopes and A.C. Position Indicators have 132mm cases.

Panel Cut-out 65 dia.

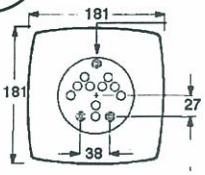

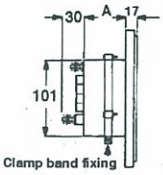

Terminals are 10-32 UNF. Case length 'C' all ammeters voltmeters, transducer indicators and meter relays use case length 86mm. Self contained Frequency, Watt, Var, Power Factor Meters, Synchroscopes and A.C. Position Indicators have 132mm cases.

Ref: IW05678 – Rev 4 – Sept 02

INSTALLATION INSTRUCTIONS

Analogue Instruments
Panel Indicators 050 Unifix Series

Where models have different terminal markings all options are illustrated. Voltage circuits should be fused. When practical, instrument circuits should be earthed at one point. CT's must not be open circuited on load. Watt, Var, Power Factor meters and Synchroscopes normally require a VT for ratings above 450V (where models have different terminal markings all options are illustrated).

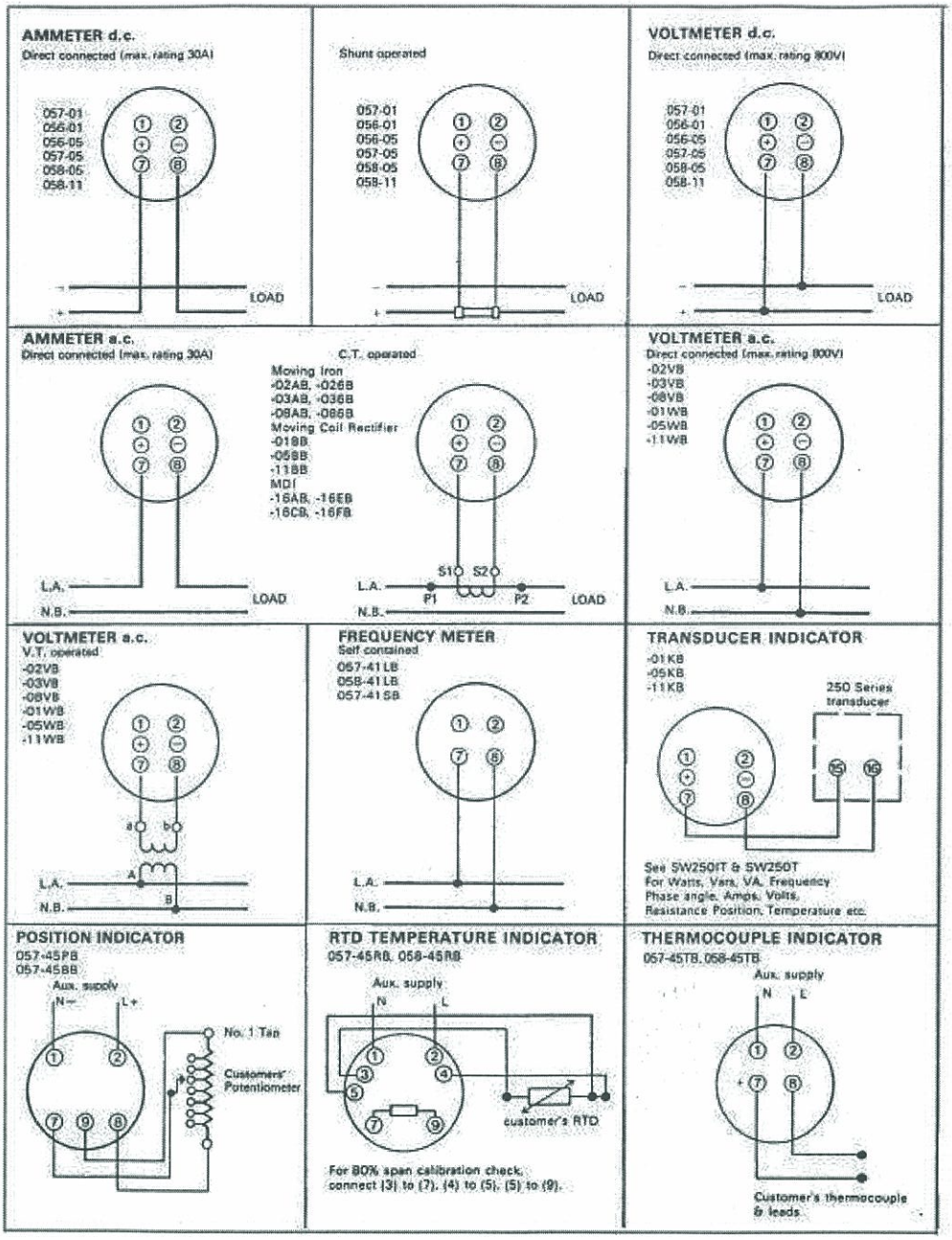

The Information contained in these installation instructions is for use only by installers trained to make electrical power installations and is intended to describe the correct method of installation for this product. However, Tyco Electronics has no control over the field conditions, which influence product installation.
It is the user's responsibility to determine the suitability of the installation method in the user's field conditions. Tyco Electronics' only obligations are those in Tyco Electronics' standard Conditions of Sale for this product and in no case will Tyco Electronics be liable for any other incidental, indirect or consequential damages arising from the use or misuse of the products. Crompton is a trade mark.

Tyco Electronics UK Limited
Crompton Instruments
Freebournes Road, Witham, Essex, CM8 3AH, UK
Phone: +44 1376 509 509 Fax: +44 1376 509 511 **http://energy.tycoelectronics.com**

INSTALLATION INSTRUCTIONS

Ref: IW05678 – Rev 4 – Sept 02

Analogue Instruments
Panel Indicators 050 Unifix Series

Connection diagrams are shown with current and voltage transformers, which are subject to separate order. Direct connected ratings are usually available for voltages up to 600V and current up to 10A.

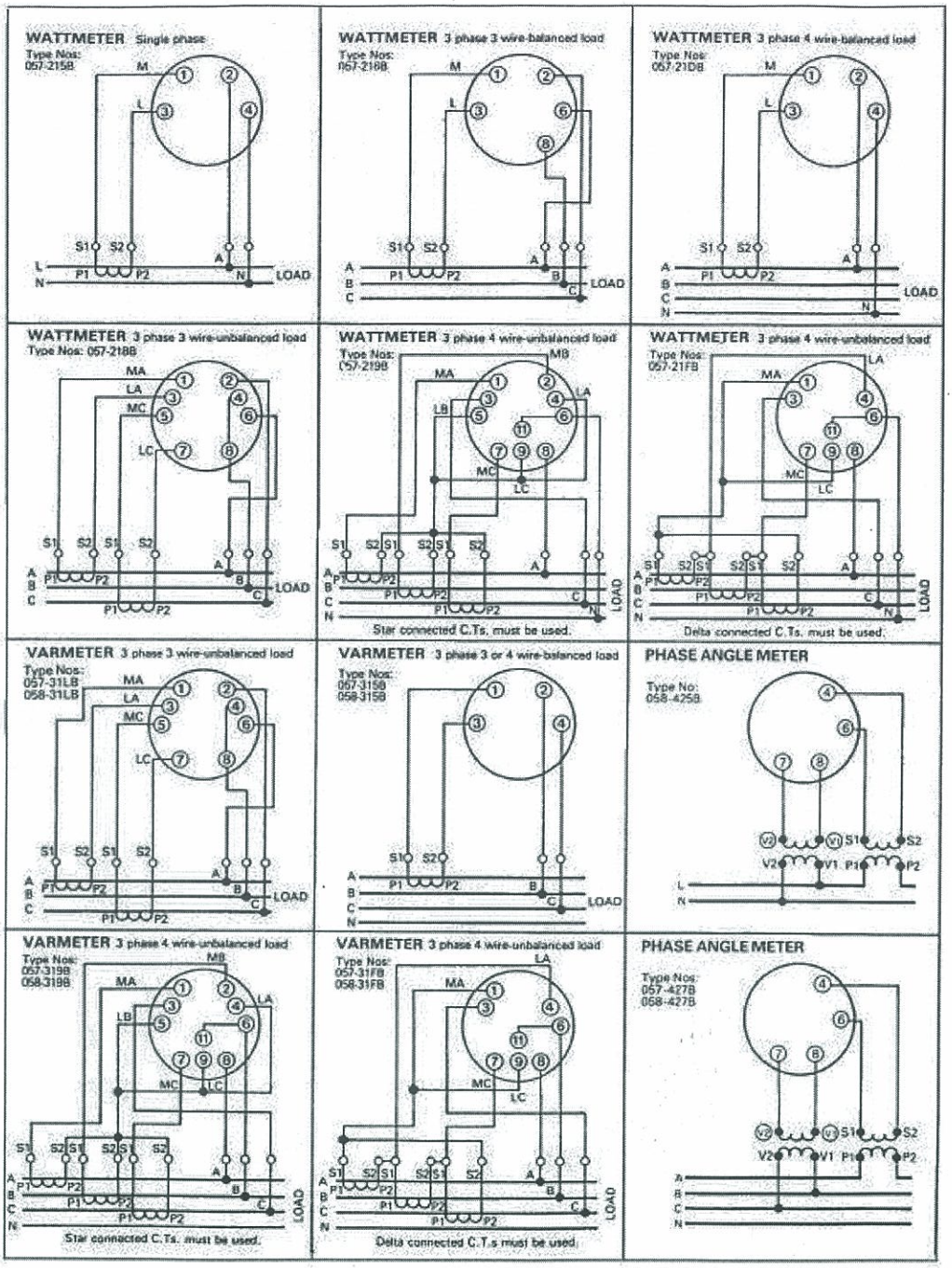

The Information contained in these installation instructions is for use only by installers trained to make electrical power installations and is intended to describe the correct method of installation for this product. However, Tyco Electronics has no control over the field conditions, which influence product installation.
It is the user's responsibility to determine the suitability of the installation method in the user's field conditions. Tyco Electronics' only obligations are those in Tyco Electronics' standard Conditions of Sale for this product and in no case will Tyco Electronics be liable for any other incidental, indirect or consequential damages arising from the use or misuse of the products. Crompton is a trade mark.

Tyco Electronics UK Limited
Crompton Instruments
Freebournes Road, Witham, Essex, CM8 3AH, UK
Phone: +44 1376 509 509 Fax: +44 1376 509 511 **http://energy.tycoelectronics.com**

Ref: IW05678 – Rev 4 – Sept 02

INSTALLATION INSTRUCTIONS

Analogue Instruments
Panel Indicators 050 Unifix Series

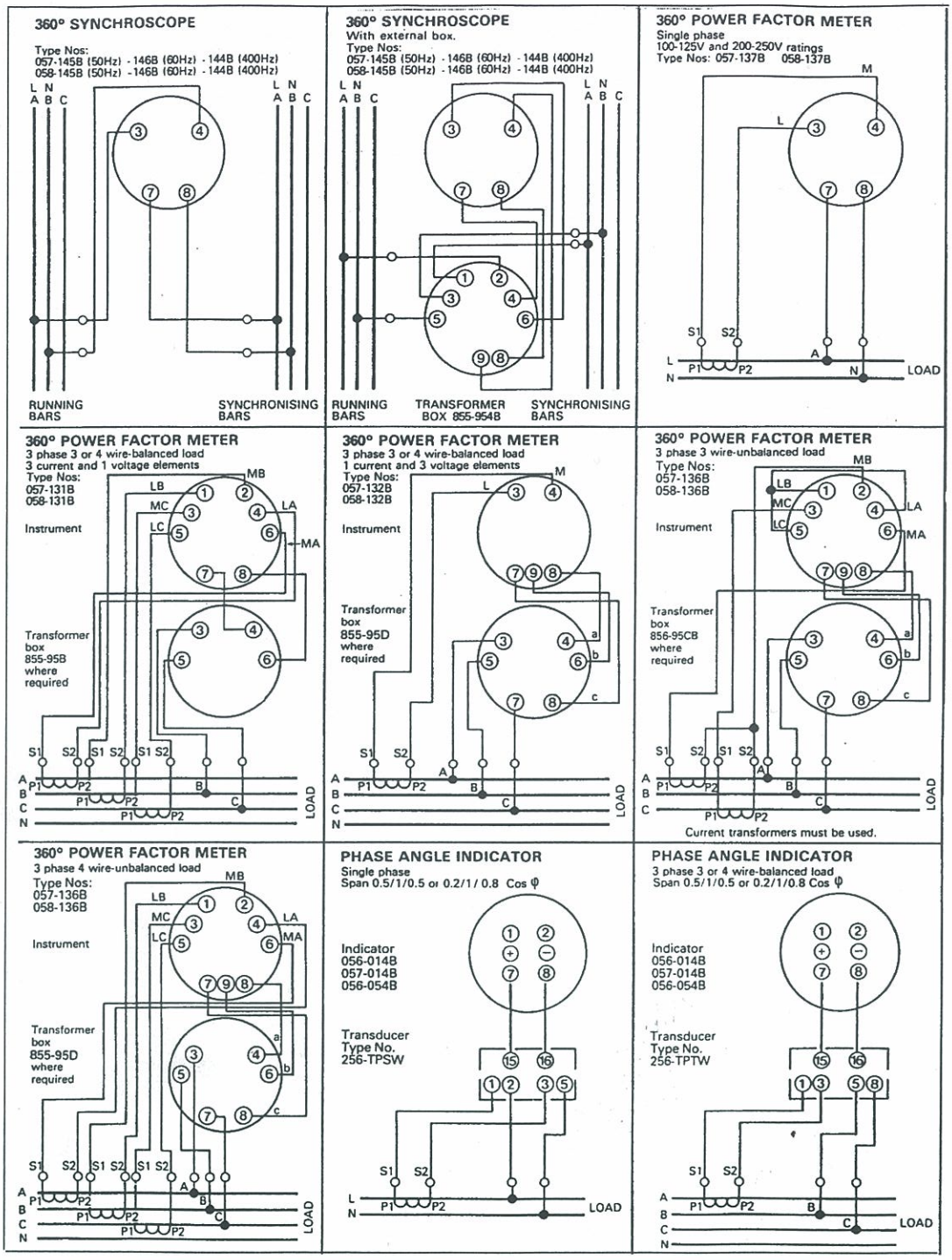

The Information contained in these installation instructions is for use only by installers trained to make electrical power installations and is intended to describe the correct method of installation for this product. However, Tyco Electronics has no control over the field conditions, which influence product installation.
It is the user's responsibility to determine the suitability of the installation method in the user's field conditions. Tyco Electronics' only obligations are those in Tyco Electronics' standard Conditions of Sale for this product and in no case will Tyco Electronics be liable for any other incidental, indirect or consequential damages arising from the use or misuse of the products. Crompton is a trade mark.

Tyco Electronics UK Limited
Crompton Instruments
Freebournes Road, Witham, Essex, CM8 3AH, UK
Phone: +44 1376 509 509 Fax: +44 1376 509 511 **http://energy.tycoelectronics.com**

FACSIMILE / TÉLÉCOPIE

No. of/de pages: PJ 625

To / À (addressee / destinataire):
SONIC BARRIER
c/o SHANE KRAMPS

From / De (sender / expéditeur):
MOELLER ELECTRIC
ALEX MELLA

MOELLER

Rotary Switch
Commutateur à cames

SO# C3-02141
PO# 63-02146

Type: / Référence: T5B-3-XXX-65/E

Writer: / Responsable: ALEX

Date: 6/25/01

Quantity: / Quantité: 1

Branch: / Succursale: 18-VAN

Customer's Order No.: / No. de commande du client: 11707

S/piece: / S/pièce: $420

No.:

Shipping instruction: / Consignes d'expédition: COMIS PPD/CHG

Switching angle / Angle de rotation: 45°

Contact units / Galettes

Front Plate No. / Plastron no.

○ STANDARD ○ SOND

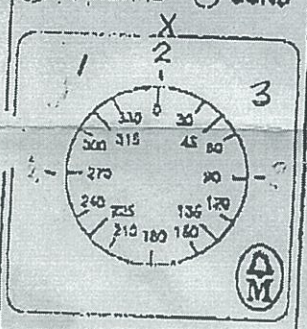

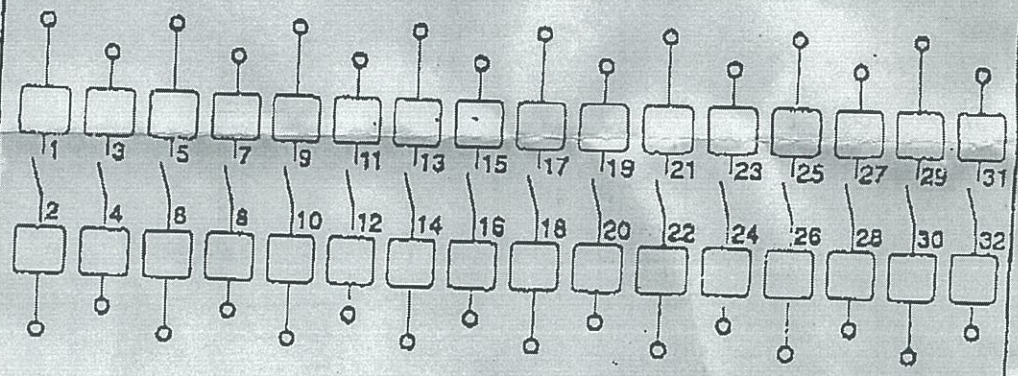

○ Complete rotation / Rotation totale

○ Spring return / Retour automatique

Switch position marking / Repérage des positions	Degrés / Degré	1 2	3 4	5 6	7 8	9 10	11 12	13 14	15 18	17 18	19 20	21 22	23 24	25 26	27 28	29 30	31 32
1	315	X	X														
2	0		X	X	X												
3	45			X	X	X	X										

Key removable / Retrait de la clé

Factory No.: / N° de l'usine: T5B-3-8630-65/E

MOELLER

Aufstellungsanweisung
Installation Instructions
Notice d'installation
Istruzioni per il montaggio
Instrucciones de montaje

Energy Control

T5B- / T5-

Nockenschalter
Cam switch
Commutateur à cames

AWA 115-1356

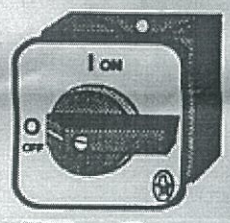

T5B-.../E
T5-.../E

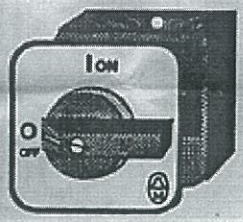

T5B-.../Z
T5-.../Z

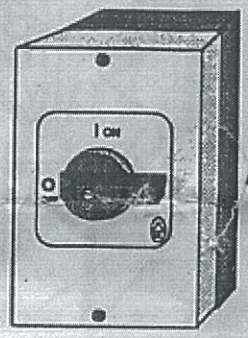

T5B-.../I

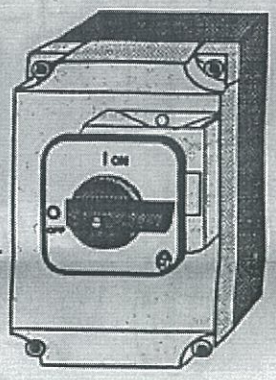

T5-.../CI19

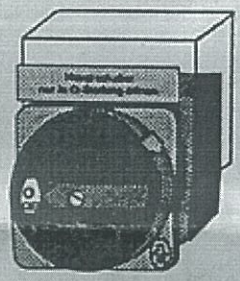

T5B-.../EA/SVB
T5-.../EA/SVB

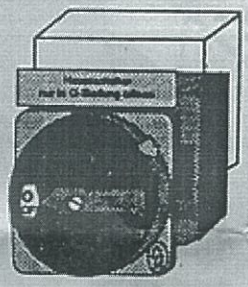

T5B-.../V/SVB
T5-.../V/SVB

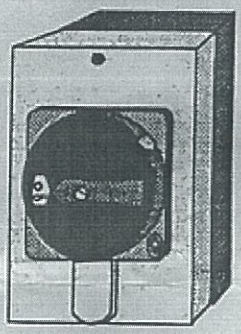

T5B-.../I/SVB

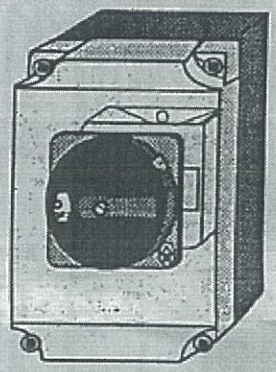

T5-.../CI19/SVB

1 : 1 All dimensions in mm

Fig.1

T5 (B).../E
T5 (B).../EA/SVB

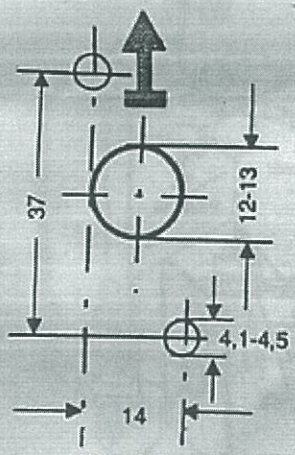

Fig.2 (Boden)

T5 (B).../Z
T5 (B).../V/SVB

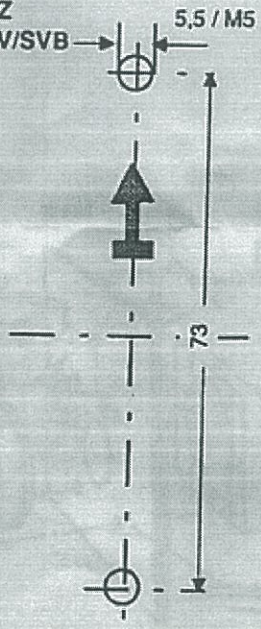

Fig.3 (Tür)

T5 (B).../Z
T5 (B).../V/SVB

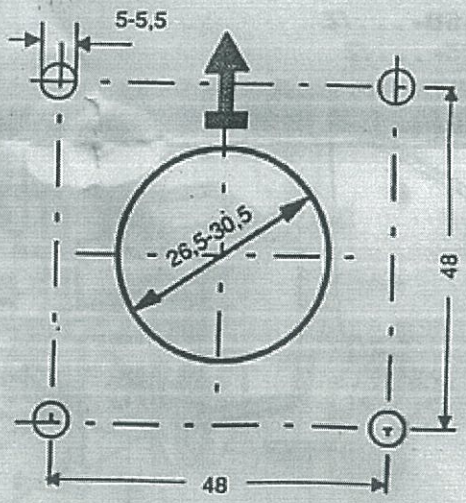

RPS 931006 T5(B)

PRINTED ON RECYCLED PAPER

T5B- . . . /E
T5- . . . /E

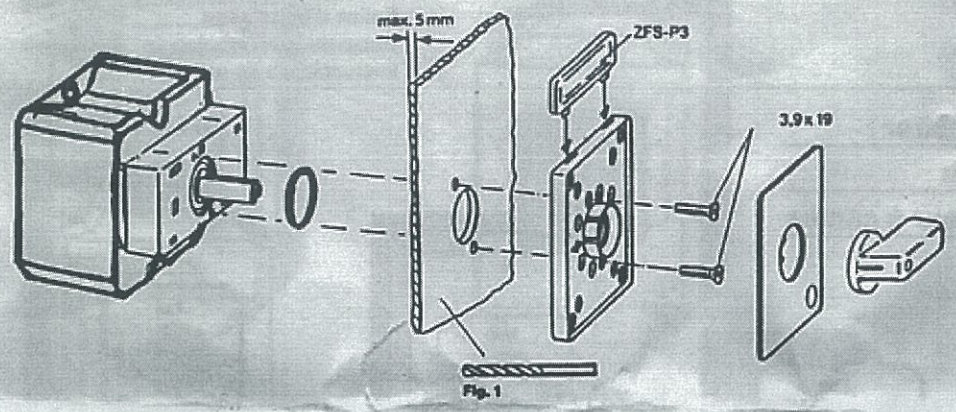

T5B- . . ./EA/SVB
T5- . . . /EA/SVB

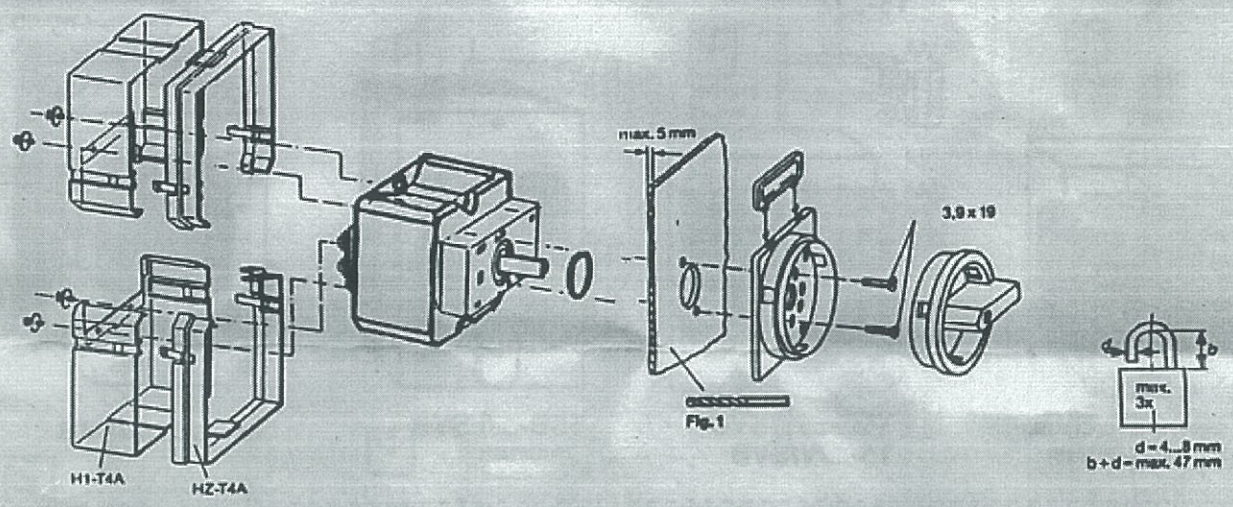

T5B- . . . /Z
T5- . . . /Z

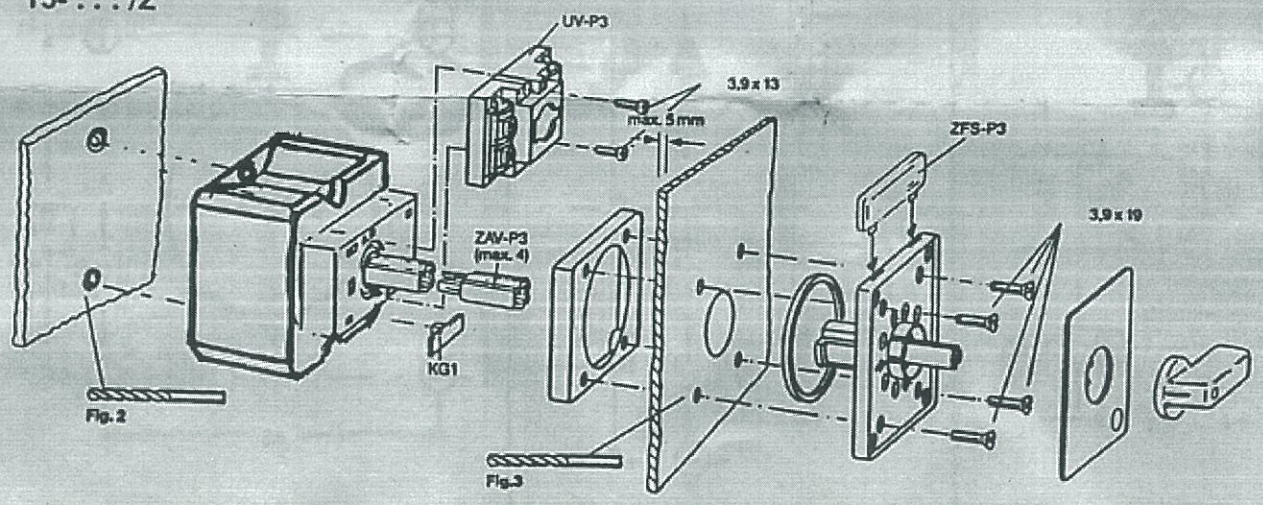

T5B- . . . /V/SVB
T5- . . . /V/SVB

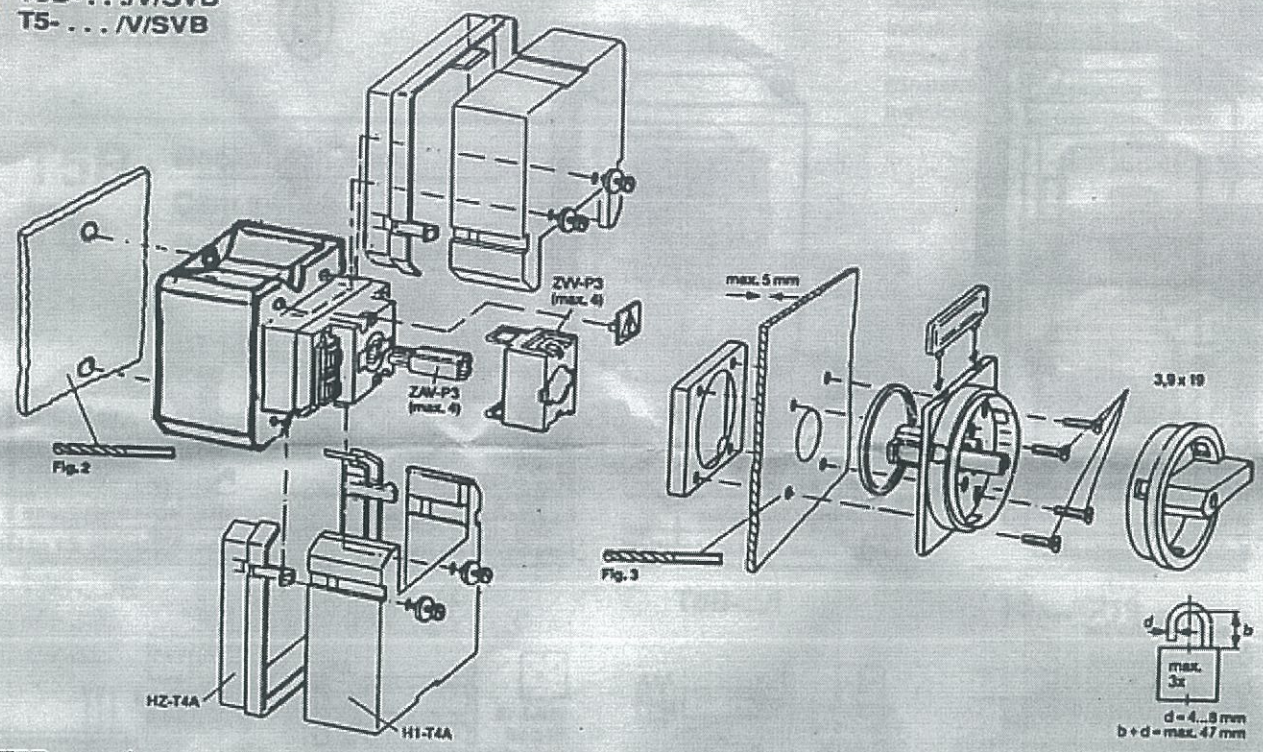

T5B- . . . /I

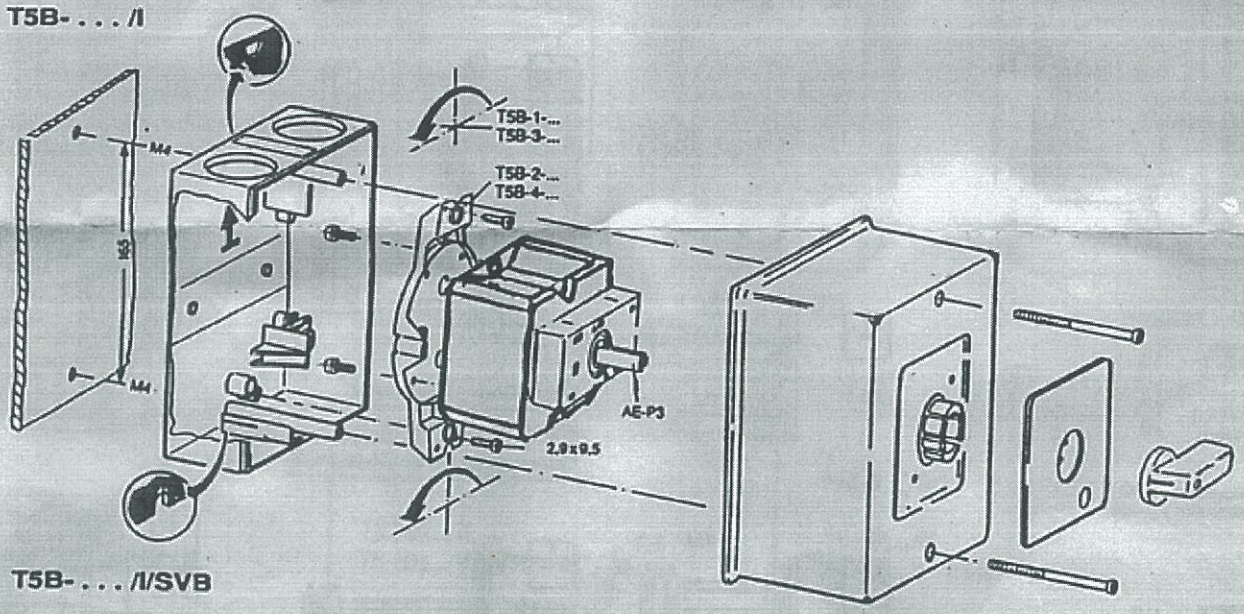

T5B- . . . /I/SVB

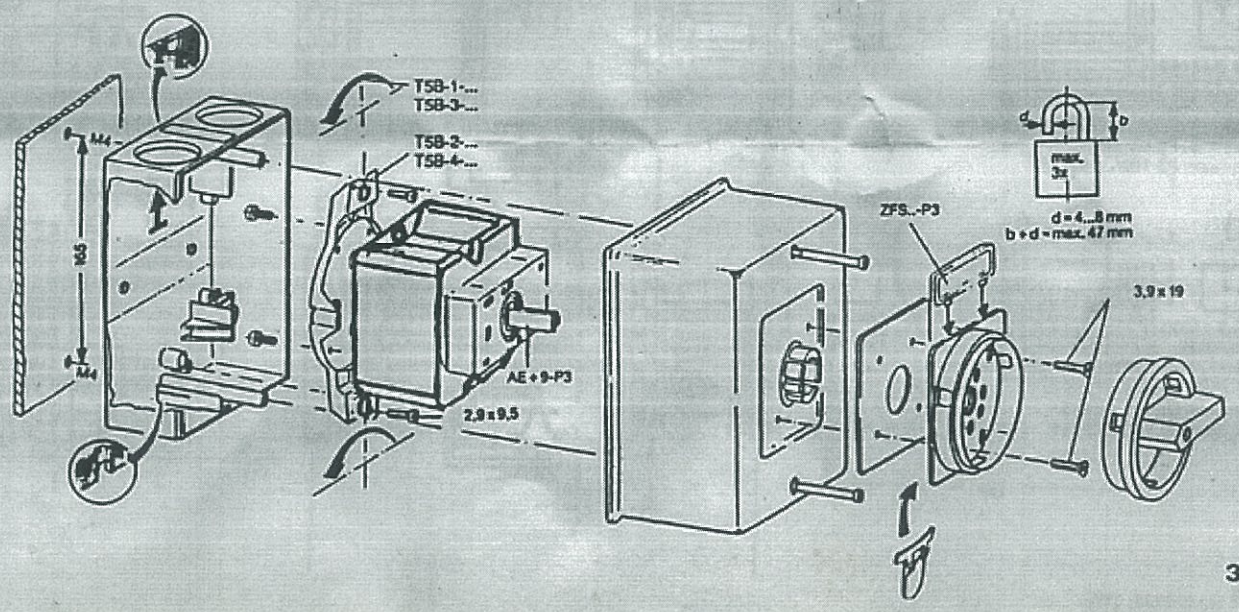

T5- . . . /CI19

T5- . . . /CI19/SVB

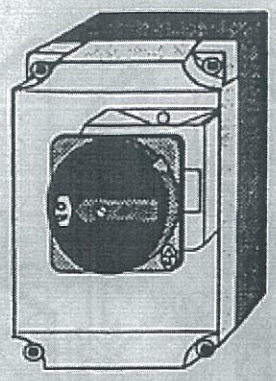

Standardschaltungen
Wire sizes
Schémas standard

Ein-Aus-Schalter
On-Off-switches
Interrupteurs

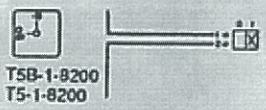
T5B-1-8200
T5-1-8200

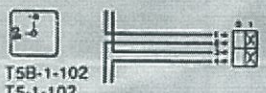
T5B-1-102
T5-1-102

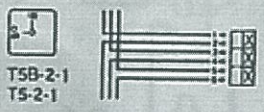
T5B-2-1
T5-2-1

Alternativ: P3-63
Alternativ: P3-100

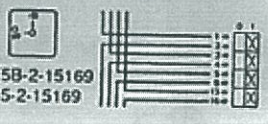
T5B-2-15169
T5-2-15169

Alternativ: P3-63/.../HI11
Alternativ: P3-100/.../HI11

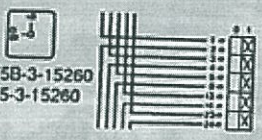
T5B-3-15260
T5-3-15260

Alternativ: P3-63/.../2HI11
Alternativ: P3-100/.../2HI11

Umschalter
Change-over Switches
Commutateurs d'alimentation

T5B-1-15180
T5-1-15180

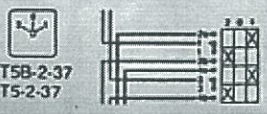
T5B-2-37
T5-2-37

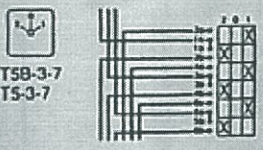
T5B-3-7
T5-3-7

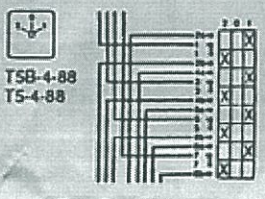
T5B-4-88
T5-4-88

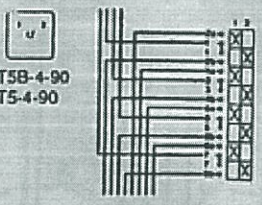
T5B-4-90
T5-4-90

Wendeschalter
Reversing Switches
Inverseurs de marche

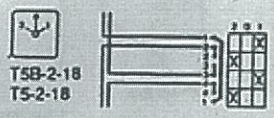
T5B-2-18
T5-2-18

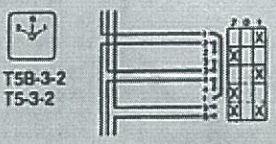
T5B-3-2
T5-3-2

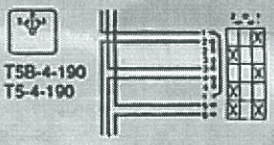
T5B-4-190
T5-4-190

Stern-Dreieck-Schalter
Star Delta Switches
Commutateurs étoile-triangle

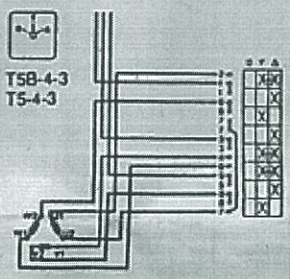
T5B-4-3
T5-4-3

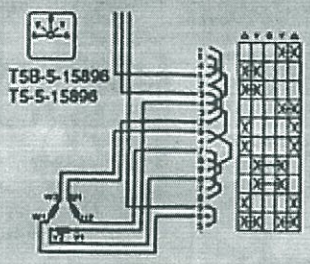
T5B-5-15896
T5-5-15896

Polumschalter
Multi-speed switches
Commutateurs de pôles

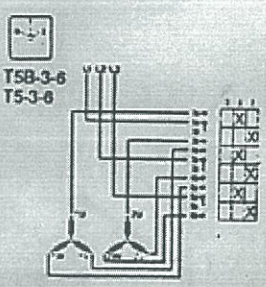
T5B-3-6
T5-3-6

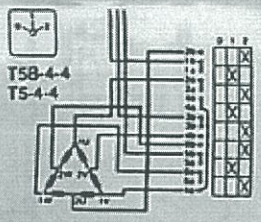
T5B-4-4
T5-4-4

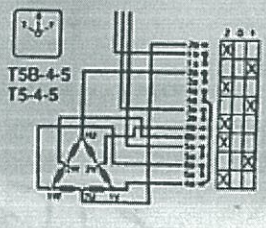
T5B-4-5
T5-4-5

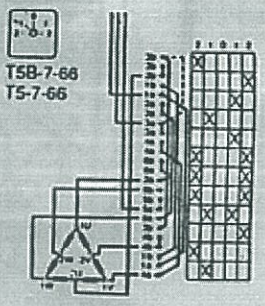
T5B-7-66
T5-7-66

INSTALLATION, OPERATION & MAINTENANCE INSTRUCTIONS

1455 Kleppe Lane •Sparks, NV 89431-6467 •(775) 359-4712 •Fax (775) 359-7424
HAWS AG •Bachweg 3 •CH-3401 Burgdorf • Switzerland
Haws Mfg. Pte Lt. •74 Sungei Kadut Loop • Singapore 729531
E-mail: haws@hawsco.com • website: www.hawsco.com

No. 2080191(4)

Model 8901B Hose Spray

NOTE TO INSTALLER: Please leave this information with the Maintenance Department.

LIMITED WARRANTY

HAWS warrants that all of its products are guaranteed against defective material or poor workmanship for a period of **one year from date of shipment.** HAWS liability under this warranty shall be discharged by furnishing without charge F.O.B. HAWS Factory any goods, or part thereof, which shall appear to the Company upon inspection to be of defective material or not of first class workmanship, provided that claim is made in writing to company within a reasonable period after receipt of the product. Where claims for defects are made, the defective part or parts shall be delivered to the Company, prepaid, for inspection. HAWS will not be liable for the cost of repairs, alterations or replacements, or for any expense connected therewith made by the owner or his agents, except upon written authority from HAWS, Sparks, Nevada. HAWS will not be liable for any damages caused by defective materials or poor workmanship, except for replacements, as provided above. Buyer agrees that Haws has made no other warranties either expressed or implied in addition to those above stated, except that of title with respect to any of the products or equipment sold hereunder and that HAWS shall not be liable for general, special, or consequential damages claimed to arise under the contract of sale.

NO OTHER WARRANTIES EXPRESSED OR IMPLIED ARE AUTHORIZED, PROVIDED OR GIVEN BY HAWS.

SHOULD YOU EXPERIENCE DIFFICULTY WITH THE INSTALLATION OF THIS MODEL, PLEASE CALL:

1-800-766-5612

(U.S.A. AND CANADA ONLY) MONDAY-THURSDAY: 6:00 A.M. – 4:00 P.M. PST
FRIDAY: 6:00 A.M – 1:00 P.M. PST

LOCATION OF UNIT: The Model 8901B Hose Spray should be installed in close proximity to potential accident areas. It should be clearly identified free from obstructions and easy to access.

SUPPLY LINE: The minimum recommended line size is 1/2" IPS with 30-90 psi (2-6 ATM) pressure. Where sediment or mineral content is a problem, an inlet filter is recommended.

PLUMBING CONNECTIONS: Inlet supply is male 1/2" IPS.

TROUBLESHOOTING

PROBLEM	REPAIR CHECKLIST
1. No flow.	1. a. Check the main shut-off valve.
2. Insufficient water flow.	2. a. Verify minimum 30-PSI flowing supply line pressure. b. Probable clogging of flow control due to inadequate line flushing. Disassemble eyewash to gain access and clean rubber flow control.
3. Valve leaks in shut-off position.	3. Refer to installation drawing. Clean valve washer and seat thoroughly, then reassemble the valve. If valve still leaks, contact HAWS and purchase VRKSP248 to repair valve.

This drawing shall not be reproduced without the written permission of HAWS CORPORATION.

PARTS BREAKDOWN

ITEM	DESCRIPTION
1	SP21 HEAD/DUSTCOVER ASSY.
2	SP37.4 FLOW CONTROL
3	SP248 VALVE ASSEMBLY
4	SP140 HOSE ASSEMBLY
5	SP176 HOSE SPRAY SIGN
6	SP170 TEST TAG
7	–
–	VRKSP248 VALVE REPAIR KIT

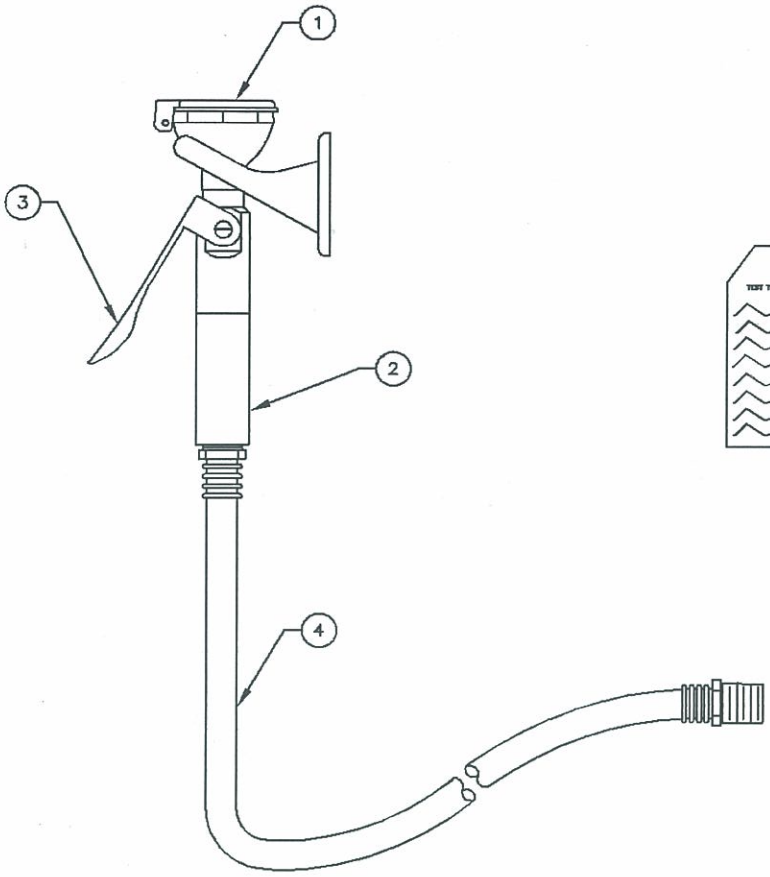

WHEN ORDERING PARTS PLEASE SPECIFY YOUR MODEL NUMBER

REV	DESCRIPTION	ECN	DATE	BY/APVD
	REVISIONS			

Haws corporation
1455 KLEPPE LANE
SPARKS, NV
BACHWEG 3
CH3401 BURGDORF
SWITZERLAND

DRAWN BY: CLF	DATE: 3 /17/93	CHECK BY:	APP'VD BY:	SCALE: 1/2
TITLE: MODEL 8901B			PART NUMBER: 0002080191	
DRAWING TYPE: PARTS BREAKDOWN			DRAWING NUMBER: 11510C00	REV. 4

THIS DOCUMENT IS TRUE AND CORRECT AT TIME OF PUBLICATION. CONTINUED PRODUCT IMPROVEMENTS MAKE SPECIFICATIONS AND MEASUREMENTS SUBJECT TO CHANGE WITHOUT NOTICE.

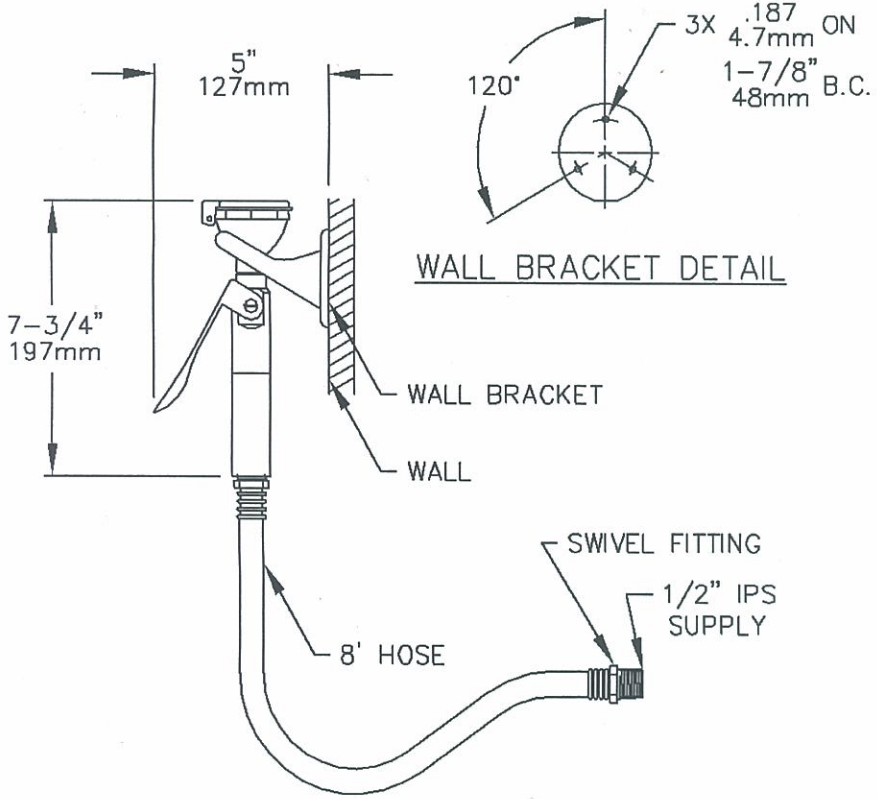

WALL BRACKET DETAIL

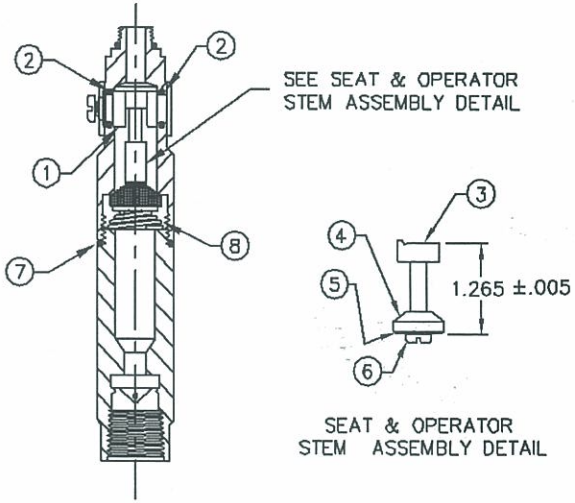

CLEAN VALVE SEAT AND WASHER THOROUGHLY, LUBRICATE 'O' RING WITH 'O' RING LUBE BEFORE REASSEMBLING.

ITEM NO.	QUANTITY	DESCRIPTION
①	1	CAM OPERATOR
②	2	'O' RING FOR CAM
③	1	OPERATOR STEM
④	1	SEAT WASHER
⑤	1	HOLDER WASHER
⑥	1	SCREW
⑦	1	'O' RING
⑧	1	SPRING

VALVE REPAIR DETAIL

DWG. NO. 09421C00

Haws corporation
INFO FAX : 1-888-FAX-HAWS (1-888-329-4297)
1455 Kleppe Ln. Sparks NV, 89431
Phone: 775-359-4712 Fax: 775-359-7424
Haws Ag Bachweg 3 CH-3401 Burgdorf Switzerland
Haws Mfg Pte Ltd 74 Sungei Kadut Loop Singapore 729531
e-mail: Haws@hawsco.com website: www.hawsco.com

REVISED PER ECN: 2798	BY: DZ	APVD:	TITLE: MODEL 8901B
DRAWN: CASEY HAYES	5/20/91		MODEL: HOSE SPRAY
APPROVED:			INFO FAX DOC #: 289012
			SCALE: 1/2 DRAWING TYPE: INSTALLATION

PART NUMBER: 0002080191.0
DRAWING NUMBER: 09421C00 REV. 4
SIZE: A OF 1

PECIFIC REQUIREMENTS

These units should be located as close to the hazard as possible without physically causing a hazard itself, such as protruding fittings. Emergency showers and eyewashes shall be in accessible locations that require no more than 10 seconds to reach, and shall be located on the same level as the hazard, and the path of travel shall be free of obstructions that may inhibit the immediate use of equipment. However, the maximum time required to reach the shower or eyewash should be determined by the potential effect of the chemical. For example, exposure to a highly corrosive chemical might require showers to be installed within 3 to 6 meters (10 to 12 feet) from the hazard or eyewashes within 3 meters (10 feet) from the hazard. It is recommended that the consulting physician be contacted for advise on the proper distance. Precautions should also be n to protect the user under frigid ons, including provisions for the pro disposal of the water. Installation procedures should be in accordance with proper plumbing practices, with supply piping sized adequately to meet flow requirements

Supply lines should be properly flushed prior to installation of emergency units.

Eye and Eye/Face Washes

If eye protection fails, continuous washing with potable water for 15 minutes should be administered, or serious damage to the eyes may occur.

An eyewash should be connected with piping no smaller than ½" IPS. All eye and eye/face wash units should be attached to a drain by a code approved method to facilitate ease of testing.

Flowing water pressure at the eyewash should be no less than 30 PSI or more than during operation.

n areas where multiple eye injuries could ccur simultaneously, more than one yewash is recommended.

Emergency Showers

Single head emergency showers should be used in all areas where chemicals are being used or where clothing fires could occur. A companion eyewash should be considered. If hazardous area is large, and there are many persons in the area, multiple installations are recommended.

Minimum pipe size to shower should be no smaller than 1" IPS. Flowing water pressure should be no less than 30 PSI or more than 90 PSI. On showers located more than 50 feet from the main water supply, piping should be sized by a qualified plumbing engineer to provide a flowing supply pressure of no less than 30 PSI.

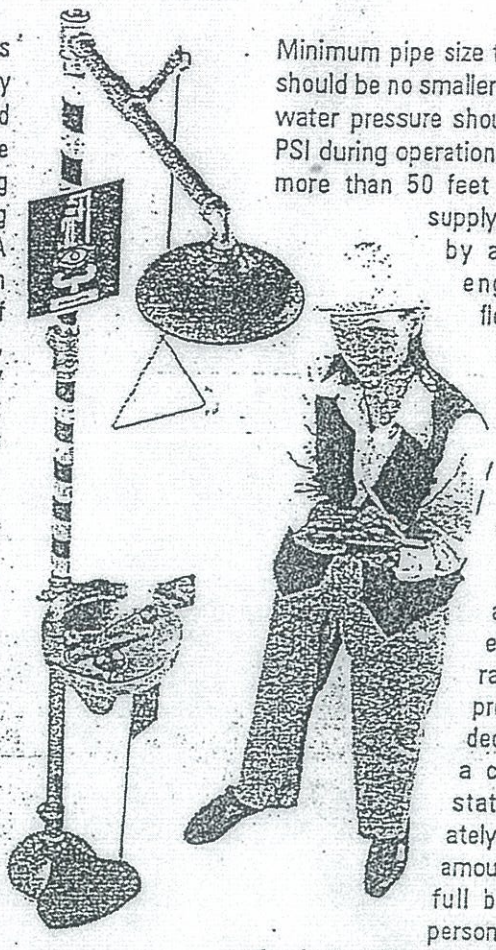

A drain should be provided for the shower.

In case of a chemical burn, the victim should shower immediately and a doctor or nurse should be notified

Combination Shower & Eyewashes

Combination single head emergency shower and eyewash models are available as a complete emergency station. The emergency shower is available for use against chemical burns and clothing fires and, since an emergency shower should not be used as an eyewash, an individually operated eyewash is also available. These units provide both an eyewash and shower with only one water supply.

A drain should be provided for the shower and the eyewash should be connected to the drainage system.

Minimum pipe size to the combination unit should be no smaller than 1 ¼" IPS. Flowing water pressure should be no less than 30 PSI during operation of both units. On units more than 50 feet from the main water supply, piping should be sized by a qualified plumbing engineer to provide a flowing supply pressure of no less than 30 PSI.

Decontamination Units

Decontamination units are used in areas where large amounts of chemicals are present or where extreme caustic or radioactive materials present a hazard. The decontamination unit is a complete emergency station which immediately discharges copious amounts of water on the full body of the injured person upon the activation of a single valve or treadle.

Minimum pipe size should be no smaller than 1" IPS on a direct line from the main water supply. Flowing water pressure at the valve should be no less than 30 PSI during operation. On decontamination units located more than 50 feet from the main water supply, piping should be sized by a qualified plumbing engineer to provide a flowing supply pressure of no less than 30 PSI.

Adequate drainage facilities are recommended on inside installations.

The injured person should immediately turn on the shower and remove all clothing as quickly as possible.

GENERAL RULES

Emergency Equipment manufactured by Haws Corporation is warranted to function if installed per provided installation and maintenance instructions. The units also must be used for the purpose for which they were intended. This product is intended to supplement first-aid treatment. Due to widely varying conditions, Haws Corporation cannot guarantee that the use of this emergency equipment will prevent serious injury or the aggravation of existing or prior injuries.

OSHA - Haws Emergency Equipment enables you to meet the requirements in the OSHA Rules and Regulations covering this type of equipment.

ANSI - Haws Emergency Equipment is manufactured to meet ANSI Z358.1 for Emergency Eyewash and Shower Equipment.

Employee Instruction

To insure adequate operation of the units, all persons should be instructed in the proper use of both the shower and eyewash. Affected areas should be rinsed at the scene of the accident for at least 15 minutes, and a doctor or industrial nurse should be contacted immediately.

WARNING: Eye/eye-face wash fountains should not be used if it is known that eye contamination is metal or some other rigid solid fragment. In such an event both the victim's eyes should be gently immobilized in accordance with the current "Red Cross Standard First Aid Manual" and medical attention immediately sought.

Identification & Signage

Units should be installed in close proximity to hazardous areas, clearly identified as eyewash stations or emergency showers or both, free from obstructions, and accessible from three directions.

Installation and Water Supply

Showers and eyewashes should be connected to the main potable water supply, and a loose-key lock-shield type stop or shut-off valve is recommended to allow proper maintenance of the unit. Valve must be labeled to prevent unauthorized shut-off.

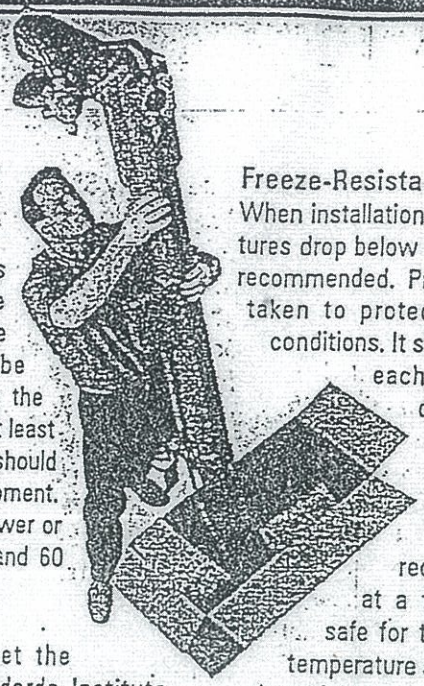

One of the most important considerations when installing water bearing emergency equipment is assuring an adequate supply of water is available to unit. Piping should be installed no smaller than the inlet size of the unit, and at least 30-PSI flowing pressure should be available to the equipment. The ideal pressure for shower or eyewash is between 40 and 60 PSI.

Only products that meet the American National Standards Institute (ANSI) for Emergency Eyewash and Shower Equipment (Z358.1) should be installed.

Emergency eye-wash, shower, drench hose, and combination units are not a substitute for proper primary protective devices. As a defense against flying solid particles and splashing injurious liquids, workers should wear eye and face protectors and protective clothing.

Proper Drainage

Appropriate drainage should be considered for emergency showers and other equipment to prevent excess accumulation of water on floors.

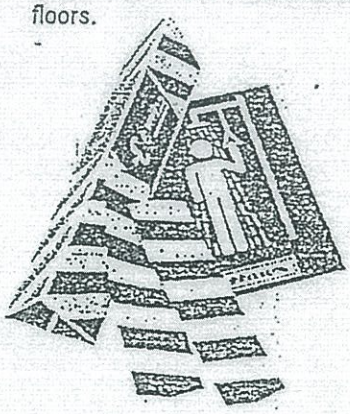

Regular Testing

All emergency showers and eyewashes should be tested weekly. A testing tag is attached to each unit and is used to record the date of the test and the initials of the tester. If there is no floor drain available for proper testing of the shower, a Haws Shower Test Kit, Model 9010, and container should be used.

Freeze-Resistance

When installations are outside and temperatures drop below 32°F, freeze-proof units are recommended. Precautions should also be taken to protect the user under frigid conditions. It shall be the responsibility of each specifying authority to determine the delivered water temperature that will be required in an area, not only to provide the flow of water as required, but also maintain it at a temperature that will be safe for the user. Delivered water temperature should not be at extremes that might be expected to discourage the unit's effective use under emergency conditions. A comfortable range is 16°C-35°C (60°F-95°F). In circumstances where chemical reaction is accelerated by water temperature, a medical advisor should be consulted for the optimum temperature for each application.

Warning Alarm Systems

In remote areas, or in hazardous locations where there are very few people, a Haws Model 9001 alarm system should be installed. This alarm activates when the shower or the eyewash unit is used in order to summon help to the injured.

Protection From Debris

Wherever possible, a Haws Model 9070 filter should be installed at the upstream of the eyewash to remove particles from the water and prevent additional eye damage. Model SP-502, ½" Y-strainer is also available.

Line size Y-strainer installed in supply line to unit should be considered to reduce chance of debris reaching eyewash and/or shower.

When protection of a Haws eyewash from dust or airborne contaminates is necessary, Haws offers Model 9102 Dust Cover which encloses the bowl and is available for selected eyewash models.

5

SERIES 250 DOORS

AVAILABLE IN 4" RADIUS ONLY AND MITRED CORNERS.

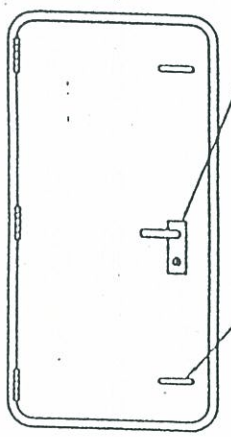

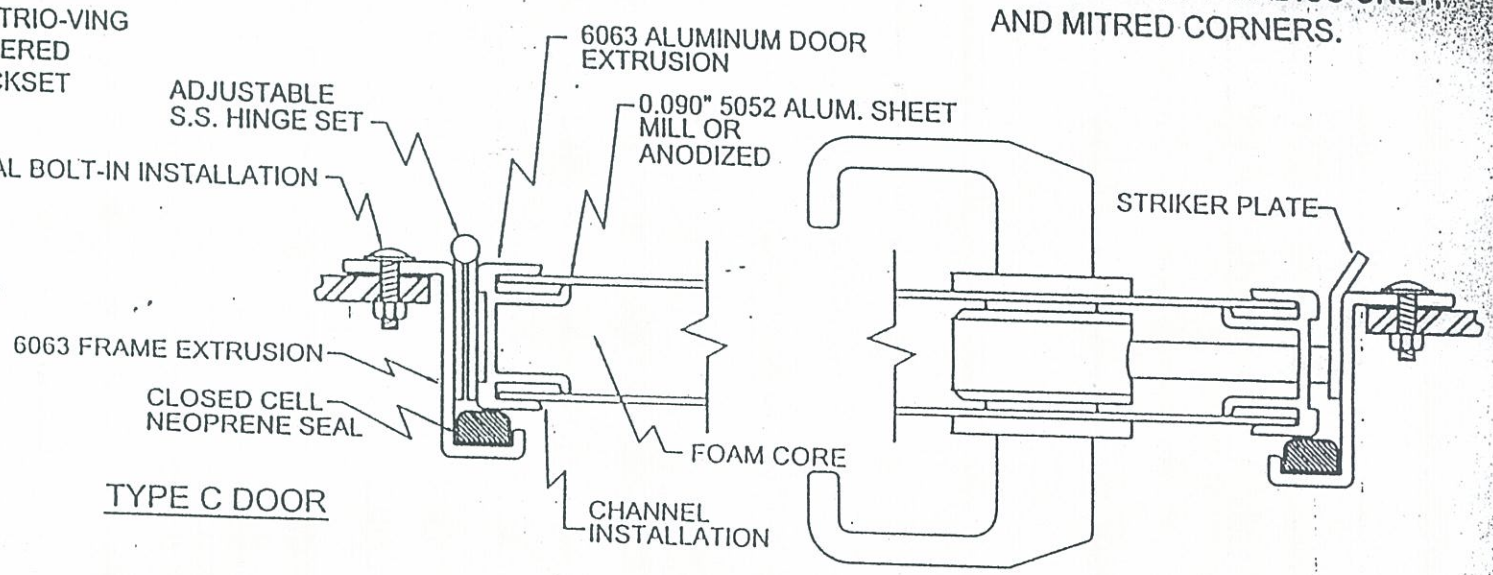

TYPE C DOOR

DOGS NOT SHOWN
S/S CYLINDRICAL LOCKEST
ALSO AVAILABLE

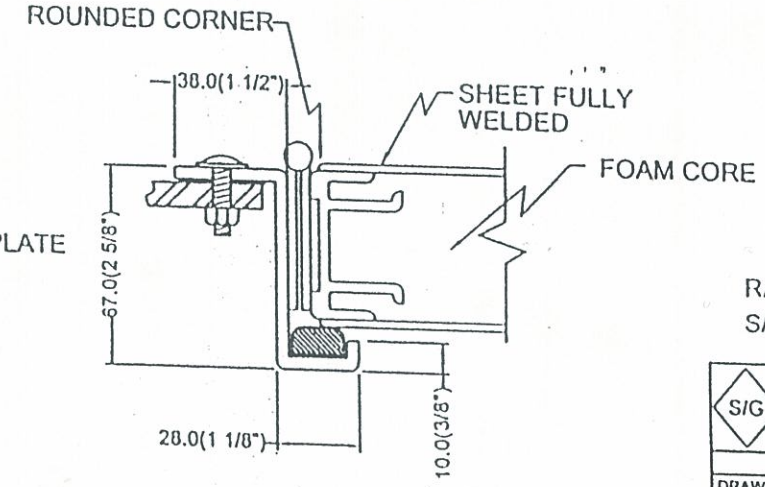

TYPE W DOOR

RADIUS CORNERS AND
S/S LEVER LOCKSET SHOWN

GENERAL NOTES

1) SPECIFY HINGE SIDE OF DOOR.
2) SPECIFY PLATE CUT: 4 1/8" RADIUS ONLY, OR MITRED CORNERS.
3) SPECIFY PLATE CUT DIMENSION OR SUPPLY TEMPLATE (HOLE CUT-OUT).
4) BOLT-IN STYLE FRAME ONLY.
5) FASTENERS FOR BOLT-IN FRAME BY SHIPYARD.
6) SPECIFY INSIDE OR OUTSIDE VIEW.
7) SPECIFY MILL FINISH OR PAINTED FRAME.
8) DOOR WINDOW OPTIONAL:
9) SPECIFY GLAZING, TYPE, TINT, AND THICKNESS - 6mm(1/4"), 9mm(3/8"), AND 12mm(1/2").
10) SPECIFY LEVERED OR CYLIDRICAL LOCKSET.

S/G DIAMOND/SEA-GLAZE
PHONE: (604) 607-0091 FAX: (604) 607-0092

	DATE	NAME	PROJECT	CLIENT
DRAWN	21/SEPT/01	GC		
REVISION				
SCALE NTS	TITLE SERIES 250 HEAVY DUTY DOORS			DWG NO. S250DR01 DWG

ITEM	DESCRIPTION	QTY	SK/P	MATERIAL
1	OUTER HANDLE	1		DIAMOND SEA GLAZE 250 DOG
2	INNER HANDLE	1		DIAMOND SEA GLAZE 250 DOG
3	WEDGE	1		DIAMOND SEA GLAZE
4	ROLL PIN	1		5/16" x 1" LG.
5	BUSHING	1		DIAMOND SEA GLAZE
6	SCREW, SET	1		1/4 - 20 UNC x 1/2" LG.
7	SPACER	1		DIAMOND SEA GLAZE
8	SPACER	1		DIAMOND SEA GLAZE
9	SPACER	1		DIAMOND SEA GLAZE
10	SCREW, STD SLOT FLAT, CNTRSNK	1		#10 -24 UNC x 3/4" LG GR 8
11	SCREW, STD SLOT FLAT CNTRSNK	1		#10 -24 UNC x 3/4" LG GR 8

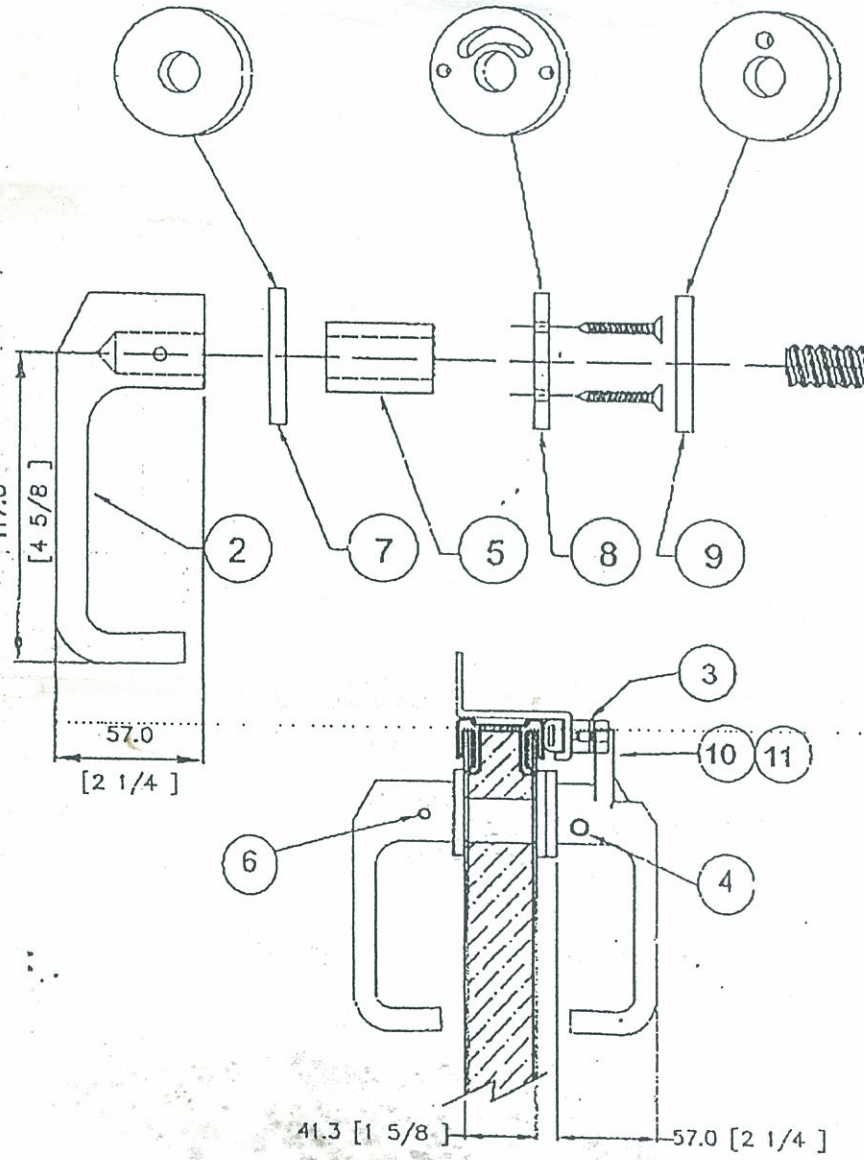

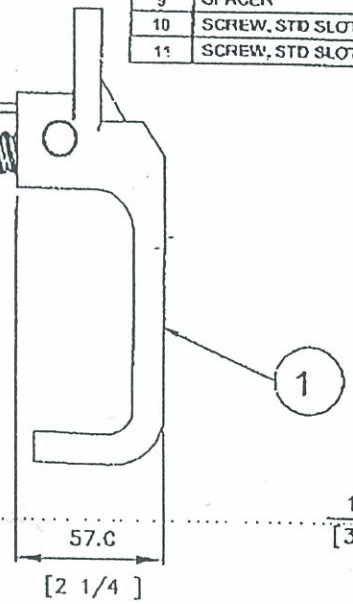

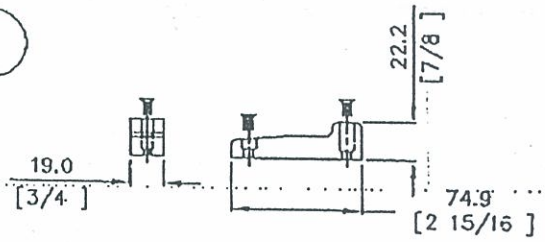

ITEM 3

DIMENSIONS IN mm(INCHES)

S/G DIAMOND/SEA-GLAZE
PHONE: (604) 882-9339 FAX: (604) 882-9393

	DATE	NAME	PROJECT	CLIENT
DRAWN	27/08/03	JH		
REVISION				
SCALE N/S	TITLE SERIES 250 DOGS			DWG. NO. 250DOGS.DWG

DORMA's 640 Series is ideal for inventory, as it provides maximum versatility at an economical cost.

The 640 is available in sized and spring adjustable versions to suit any application. The 650 Series is similar to the 640 Series, but is specially tailored for the aluminum door and frame industry.

Technical Details:

- Available as 641/651 closers for barrier free requirements (adjustable size 1-4).
- Available as 640/650 closers for greater closing force (adjustable size 3-6).
- Available as 642 through 646 closers for fixed size, non-adjustable version.
- Available in regular, top jamb, parallel arm and track applications.
- A full complement of specialty arms, plates and brackets available.
- Can retrofit Norton 1600 (size 4, 5 or 6); Yale 50 (size 4, 5 or 6) and other closers with similar hole spacing.
- Backcheck standard on 650 Series, optional on 640 Series.
- Delayed action or backcheck/delayed action optional.
- Optional streamline cover (COV), full plastic cover (FCOV) or full metal cover (FMCOV).
- 650 Series furnished with 1/4-20 type F self-tapping fasteners.
- 640 Series furnished with 1/4-20 combination wood/metal fasteners.

Certification:

The DORMA 640/650 Series are listed by U.L. and C.U.L. under their continuing reinspection programs. The 640/650 Series are certified to conform to the requirements of ANSI A156.4 Grade 1. Meets the requirments for UL10C and UBC 7.2 (1997) for positive pressure. The 641/651 versions meet the requirements of ANSI A117.1 and A.D.A. for barrier-free accessibility.

Specification:

All closers shall be 640/650 Series hydraulic surface-applied rack and pinion closers. The closers will have aluminum alloy bodies with high compression steel springs and hardened rack and pinions for doors opening up to 180° maximum. The closers will have two non-critical thermostatic valves to separately control sweep and latch speeds and provide constant closing speeds even under extreme temperatures.

All 650 Series closers will include adjustable hydraulic backcheck to prevent uncontrolled opening of the door from approximately 60°. All 641/651 closers shall have adjustable spring power from sizes 1-4 and be capable of compliance with 5 lb. (interior) and 8.5 lb. (exterior) barrier-free opening force restrictions. All 640/650 closers shall have adjustable spring power from sizes 3-6 to meet a variety of on-site conditions. All

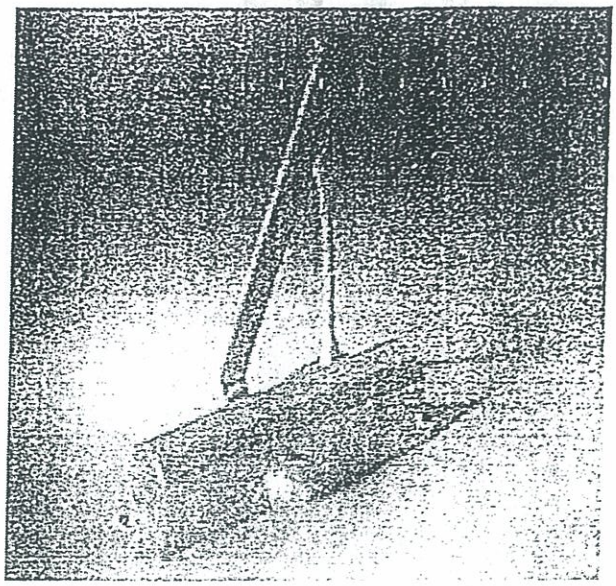

642-646 closers shall have fixed spring sizes appropriate for the application. Bodies and arm assemblies to be corrosion resistant and finished with a prime coat and color top coat. Closers shall be capable of installation in regular, top jamb and parallel arm applications. All 640 Series closers shall also be capable of track installation.

Optional Specifications:

All 640 Series closers to have adjustable hydraulic backcheck to prevent uncontrolled opening of the door from approximately 60°.

All closers to have adjustable hydraulic delayed action from approximately 180° to 60° to allow easy unimpeded passage through a doorway.

All closers to have backcheck/delayed action to provide a combination of adjustable hydraulic backcheck and delayed action to facilitate delayed closing for unrestricted egress while providing resistance to uncontrolled opening of the door.

Closers to have streamline cover with compact dimensions of 11-3/8" x 2" and 3" projection.

Closers to have full metal or full plastic cover with compact dimensions of 11-3/8" x 2-3/4" and 3" projection.

Finishes:

Standard Sprayed Finishes: Aluminum (AL), Dull Bronze (DB), Statuary Bronze (STAT), Dark Duranodic Bronze (DURO), Gold (GL), Black (BLK).

Optional Special Color Sprayed Finishes: Specify code number or submit color chip.

Optional Plated Finishes: Bright Brass (US3), Satin Brass (US4), Bright Bronze (US9), Satin Bronze (US10), Oxidized Satin Bronze Oil Rubbed (US10B), Bright Nickel (US14), Satin Nickel (US15), Bright Chrome (US26), Satin Chrome (US26D).

Warranty: 25 Years.

640
- Adjustable size 3-6
- 1/4-20 combination wood/metal fasteners
- Backcheck optional

650
- Adjustable size 3-6
- 1/4-20 type F self tapping fasteners
- Backcheck standard

641
- Adjustable size 1-4
- 1/4-20 combination wood/metal fasteners
- Backcheck optional

651
- Adjustable size 1-4
- 1/4-20 type F self tapping fasteners
- Backcheck standard

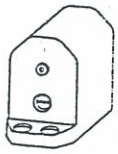

642 - 646
- Fixed spring size 2, 3, 4, 5 or 6
- 1/4-20 combination wood/metal fasteners
- Backcheck optional

652 - 656
- Fixed spring size 2, 3, 4, 5 or 6
- 1/4-20 type F self tapping fasteners
- Backcheck standard

How to Order 640/650 Series			Example
Size	Adjustable 3 - 6		640/650
	Adjustable 1 - 4		641/651
	Fixed spring size 2, 3, 4, 5 or 6 (specify)		644/654
Application	No designation	- Regular and top jamb mount	640/650
	PA	- Parallel arm, regular and top jamb mount	640/650 (PA)
Body Option	BC	- Adjustable hydraulic backcheck (standard with 650)	640 BC
	DEL	- Adjustable delayed action (in lieu of backcheck)	640/650 (DEL)
	BC/DEL	- Adjustable hydraulic backcheck and delayed action	640/650 (BC/DEL)
	COV	- Streamline plastic cover	640/650 (COV)
	FCOV	- Full metal cover (specify hand for TJ, T and FT applications)	640/650 (FCOV)
Arm	SEC - ARM	- Prohibits separation of regular arm and extension arm	640/650 (SEC-ARM)
	FHO	- Friction hold open	640/650 (FHO)
	PHO	- Plunger hold open	640 (PHO)
	FL	- Fusible link hold open (Regular and PA specify hand; specify opposite hand for TJ mount)	640 (FL)
	SPA	- Super parallel arm	640 (SPA)
	SPATHO	- Super parallel arm, thumb turn hold open	640 (SPATHO)
	SPAKHO	- Super parallel arm, hex key turn hold open	640 (SPAKHO)
	DS	- Door Saver parallel arm	640 (DS)
	DSTHO	- Door Saver parallel arm, thumb turn hold open	640 (DSTHO)
	DSKHO	- Door Saver parallel arm, hex key turn hold open	640 (DSKHO)
	T	- Door mounted slide track arm	640 (T)
	THO	- Door mounted slide track arm hold open	640 (THO)
	JT	- Jamb mounted slide track arm	640 (JT)
	JTHO	- Jamb mounted slide track arm hold open	640 (JTHO)
	PT	- Stop mounted slide track arm	640 (PT)
	PTHO	- Stop mounted slide track arm hold open	640 (PTHO)
	FT	- Flush transom, push side door mounted slide track arm	640 (FT)
	FTHO	- Flush transom, push side door mounted slide track arm hold open	640 (FTHO)
	TDE	- Jamb mounted slide track arm, double egress	640 (TDE)
	THODE	- Jamb mounted slide track arm, double egress hold open	640 (THODE)
Accessories	Specify the number of the accessory.		640/650 x (690)
Finish	See DORMA finish information in this brochure. Example: AL = Aluminum (689)		640/650 (AL)

ANSI Series CO3000 (No Cover)

ANSI Number (No Cover)	Function	DORMA Closer	PT 4A 15% Power Adj.	PT 4B 35% Power Adj.	PT 4C 50% Power Adj.	PT 4D Adj. Backcheck	PT 4F Delayed Action	PT 4G Dead Stop	PT 4H Fully Adj.
CO3011-PT1	Hinge Side	640	S	S	S	O (BC)	O (DEL)	O (IS)	S
CO3012-PT2	Mount	650	S	S	S	S	O (DEL)	O (IS)	S
CO3013-PT3		641	S	S	S	O (BC)	O (DEL)	O (IS)	S
		651	S	S	S	S	O (DEL)	O (IS)	S
		642-646	S	-	-	O (BC)	O (DEL)	O (IS)	-
		652-656	S	-	-	S	O (DEL)	O (IS)	-
CO3051-PT1	Hinge Side	640 PHO, 640 FHO	S	S	S	O (BC)	O (DEL)	-	S
CO3052-PT2	Mount	650 FHO	S	S	S	S	O (DEL)	-	S
CO3053-PT3	Holder Arm	641 PHO, 641 FHO	S	S	S	O (BC)	O (DEL)	-	S
		651 FHO	S	S	S	S	O (DEL)	-	S
		642-646 PHO, 642-646 FHO	S	-	-	O (BC)	O (DEL)	-	-
		652-656 FHO	S	-	-	S	O (DEL)	-	-
CO3091-PT1	Hinge Side	640 FL	S	S	S	O (BC)	O (DEL)	-	S
CO3092-PT2	Mount Fusible	641 FL	S	S	S	O (BC)	O (DEL)	-	S
CO3093-PT3	Link Holder Arm	642-646 FL	S	-	-	O (BC)	O (DEL)	-	S
CO3021-PT1	Parallel Arm	640 PA	S	S	S	O (BC)	O (DEL)	O (DS)	S
CO3022-PT2	Mount	650 PA	S	S	S	S	O (DEL)	-	S
CO3023-PT3		641 PA	S	S	S	O (BC)	O (DEL)	O (DS)	S
		651 PA	S	S	S	S	O (DEL)	-	S
		642-646 PA	S	-	-	O (BC)	O (DEL)	O (DS)	-
		652-656 PA	S	-	-	S	O (DEL)	-	-
CO3061-PT1	Parallel Arm	640 PAFHO, 640 PAFHO	S	S	S	O (BC)	O (DEL)	O (DSHO)	S
CO3062-PT2	Mount Holder	650 PAFHO	S	S	S	S	O (DEL)	-	S
CO3063-PT3	Arm	641 PAFHO, 641 PAFHO	S	S	S	O (BC)	O (DEL)	O (DSHO)	S
		651 PAFHO	S	S	S	S	O (DEL)	-	S
		642-646 PAFHO, 642-646 PAFHO	S	-	-	O (BC)	O (DEL)	O (DSHO)	-
		652-656 PAFHO	S	-	-	S	O (DEL)	-	-
CO3101-PT1	Parallel Arm	640 PAFL	S	S	S	O (BC)	O (DEL)	-	S
CO3102-PT2	Fusible Link	641 PAFL	S	S	S	O (BC)	O (DEL)	-	S
CO3103-PT3	Holder Arm	642-646 PAFL	S	-	-	O (BC)	O (DEL)	-	-
CO3031-PT1	Corner Bracket	640 x 671	S	S	S	O (BC)	O (DEL)	-	S
CO3032-PT2	Mount	650 x 671	S	S	S	S	O (DEL)	-	S
CO3033-PT3		641 x 671	S	S	S	O (BC)	O (DEL)	-	S
		651 x 671	S	S	S	S	O (DEL)	-	S
		642-646 x 671	S	-	-	O (BC)	O (DEL)	-	-
		652-656 x 671	S	-	-	S	O (DEL)	-	-
CO3071-PT1	Corner Bracket	640 PHO x 671, 640 FHO x 671	S	S	S	O (BC)	O (DEL)	-	S
CO3072-PT2	Holder Arm	650 FHO x 671	S	S	S	S	O (DEL)	-	S
CO3073-PT3	Mount	641 PHO x 671, 641 FHO x 671	S	S	S	O (BC)	O (DEL)	-	S
		651 FHO x 671	S	S	S	S	O (DEL)	-	S
		642-646 FHO x 671, 642-646 FHO x 671	S	-	-	O (BC)	O (DEL)	-	-
		652-656 FHO x 671	S	-	-	S	O (DEL)	-	-
CO3111-PT1	Corner Bracket	640 FL x 671	S	S	S	O (BC)	O (DEL)	-	S
CO3112-PT2	Mount Fusible	641 FL x 671	S	S	S	O (BC)	O (DEL)	-	S
CO3113-PT3	Link Holder Arm	642-646 FL x 671	S	-	-	O (BC)	O (DEL)	-	-
CO3041-PT1	Top Jamb	640	S	S	S	O (BC)	O (DEL)	O (IS)	S
CO3042-PT2	Mount	650	S	S	S	S	O (DEL)	O (IS)	S
CO3043-PT3		641	S	S	S	O (BC)	O (DEL)	O (IS)	S
		651	S	S	S	S	O (DEL)	O (IS)	S
		642-646	S	-	-	O (BC)	O (DEL)	O (IS)	-
		652-656	S	-	-	S	O (DEL)	O (IS)	-
CO3081-PT1	Top Jamb	640 FHO, 640 FHO	S	S	S	O (BC)	O (DEL)	-	S
CO3082-PT2	Mount Holder	650 FHO	S	S	S	S	O (DEL)	-	S
CO3083-PT3	Arm	641 PHO, 641 FHO	S	S	S	O (BC)	O (DEL)	-	S
		651 FHO	S	S	S	S	O (DEL)	-	S
		642-646 PHO, 642-646 FHO	S	-	-	O (BC)	O (DEL)	-	-
		652-656 FHO	S	-	-	S	O (DEL)	-	-
CO3121-PT1	Top Jamb	640 FL	S	S	S	O (BC)	O (DEL)	-	S
CO3122-PT2	Mount Fusible	641 FL	S	S	S	O (BC)	O (DEL)	-	S
CO3123-PT3	Link Arm	642-646 FL	S	-	-	O (BC)	O (DEL)	-	-

- Not Available
S Standard
O Optional

NOTE: The 665 or 660D bracket may be added to any above non-hold open parallel arm application. Also, the 665 bracket may be used for any non-hold open hinge side application. A streamline cover (CDV) or full metal cover (FCDV) may be added to the above closers to meet the requirements of ANSI Series CO2000.

CERTIFIED ISO 9001

The quality assurance system at the Reamstown, PA facility is certified to ISO-9001.

BHMA CERTIFIED

Technical Drawing Symbols and Notes

✓ – Recommended application

N/A – Not applicable / application not recommended

♿ – Opening force 5 lbs. or less on interior doors / 8.5lbs. or less on exterior doors for door width noted.

Note: Although DORMA 640/650 Series closers have adjustable spring power to compensate for site conditions, it can not be guaranteed that adequate closing force will be obtained while complying with barrier-free opening force restrictions.

Regular Installation

640
650

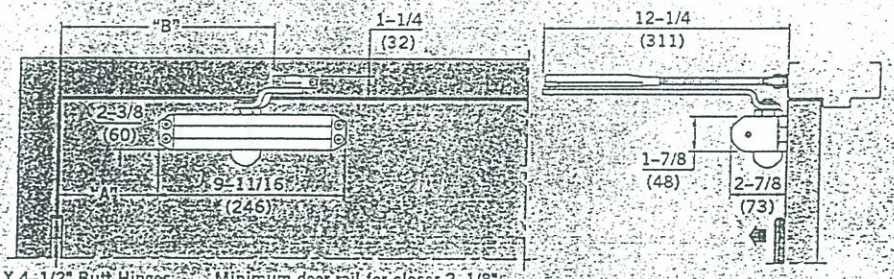

4-1/2" X 4-1/2" Butt Hinges

Minimum door rail for closer 2-1/8".
Minimum door rail to bottom of optional COV 2-1/2".
Minimum door rail to bottom of optional FCOV 3-1/8".

Size Selection Chart

CLOSER	INTERIOR/ EXTERIOR	DOOR WIDTH 2'-0" min.	2'-6" max.	3'-0" max.	3'-6" max.	4'-0" max.	TEMPLATE REFERENCE	DIM. "A"	DIM. "B"	APPROX. MAXIMUM OPENING	APPROX. BACKCHECK	APPROX. DELAYED ACTION
640 650	INTERIOR	N/A	N/A	✓	✓	✓	TO 100°	6-3/4" (171)	15-1/8" (384)	118°	67°-118°	118°-68°
	EXTERIOR	N/A	✓	✓	♿	♿	100° TO 120°	5-3/4" (146)	14-1/8" (359)	136°	70°-136°	136°-68°
641 651	INTERIOR	✓	✓	♿	♿	N/A						
	EXTERIOR	✓	✓	♿	N/A	N/A	OVER 120°	3-1/4" (83)	11-5/8" (295)	160°	87°-160°	160°-82°
642-645	INTERIOR	N/A	642	643	644	645						
	EXTERIOR	642	643	644	645	646						
652-656	INTERIOR	N/A	652	653	654	655						
	EXTERIOR	652	653	654	655	656						

INSTALLATION INSTRUCTIONS

640 SERIES PHO *(HOLD OPEN ARM)* PARALLEL ARM MOUNT AND ACCESSORY PLATE 690,6689,6690

1 (REFERENCE UNIT CARTON FOR ACCESSORIES AND OPTIONS SUPPLIED)

Determine hand of door. Prepare door and frame according to template on page 3 or 4.

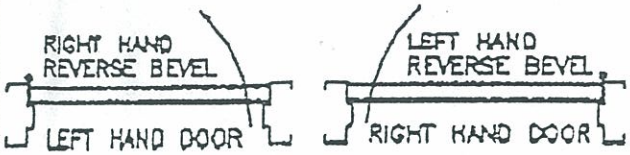

SEX NUTS ARE RECOMMENDED FOR ATTACHMENT OF COMPONENTS ON UNREINFORCED OR COMPOSITE DOORS.

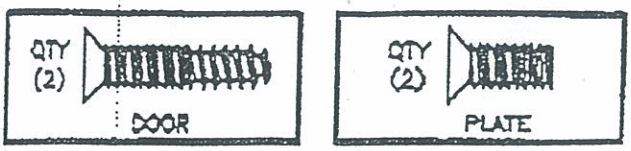

2 (690,6689,6690 PLATE APPLICATIONS ONLY)

Install plate to door.

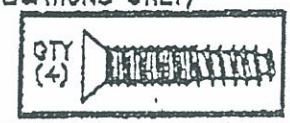

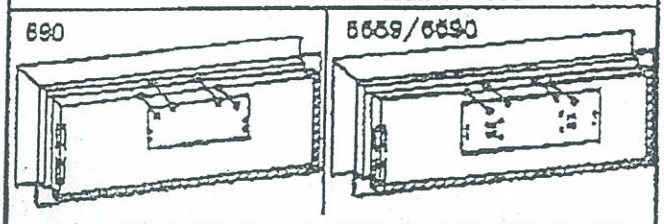

NOTE: LEFT HAND INSTALLATION SHOWN, RIGHT HAND IS A MIRROR IMAGE.

4 Install bracket to frame.

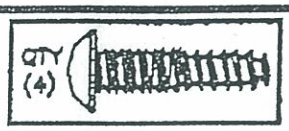

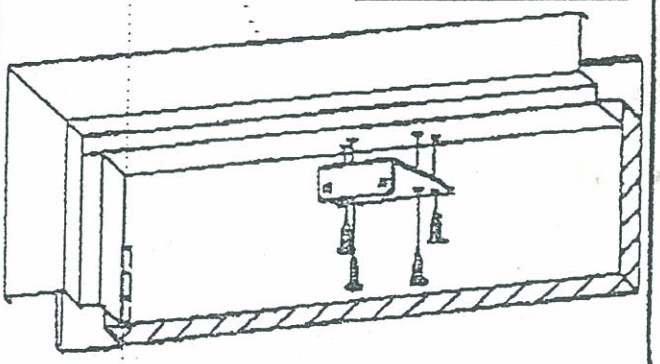

3 Mount closer to door or plate.

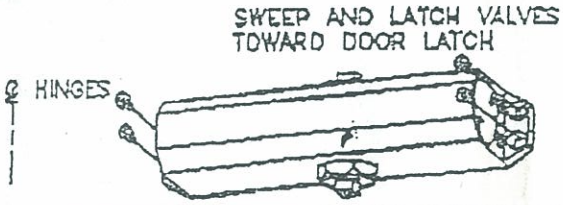

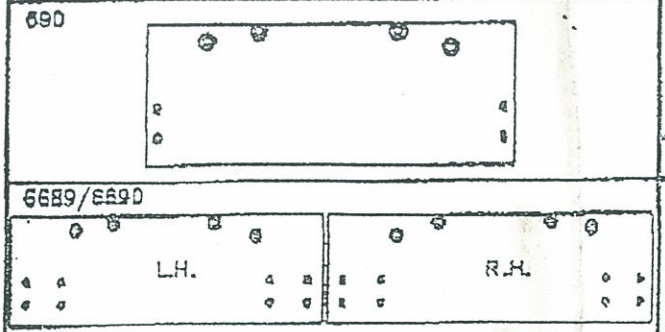

HOLES FOR MOUNTING CLOSER TO PLATE

REMAINDER OF STEP IS FOUND AT THE TOP OF THE PAGE.

5 Loosen screws in connecting arm with 4MM hex wrench. Adjust arm length as shown below. Re-tighten screws in connecting arm.

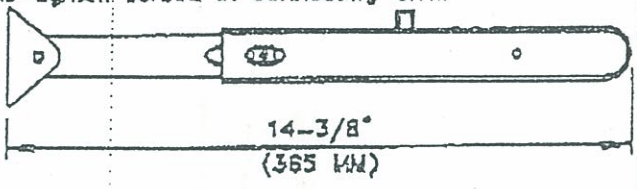

6 Install shoe to bracket.

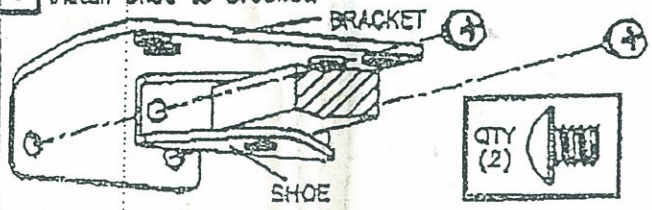

08079642 8/95

JAN-09-2002 15:01 ALLMER DIST.LTD 6042997377 P.02/05

7 Attach arm to closer.

CRITICAL

With door opened, rotate pinion towards hinge edge of door. Place arm on pinion so index mark aligns as shown below. Secure arm with washer and pinion screw.

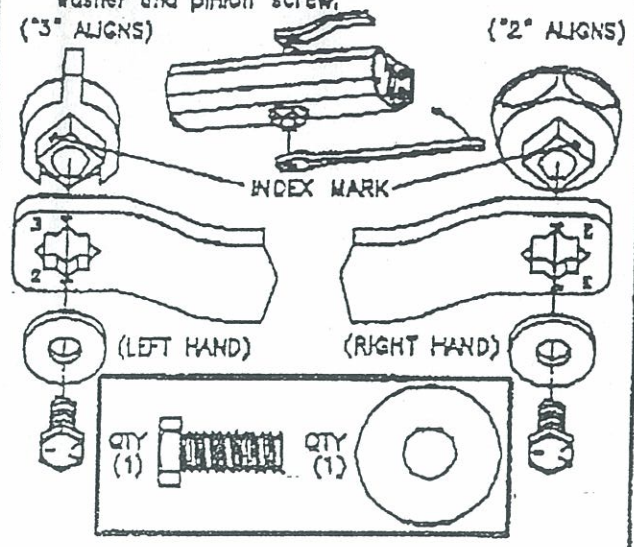

8 Adjust sweep, latch and backcheck or delayed action cycles.

CAUTION: DO NOT REMOVE VALVES.

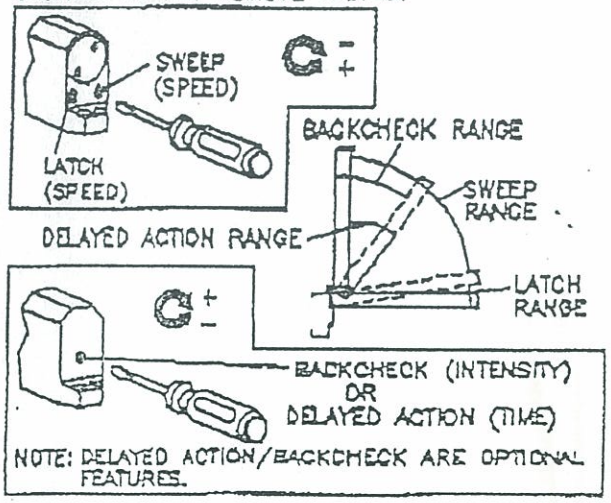

NOTE: DELAYED ACTION/BACKCHECK ARE OPTIONAL FEATURES.

9 Adjust spring tension, if required. 643-646 non-adjustable

CRITICAL

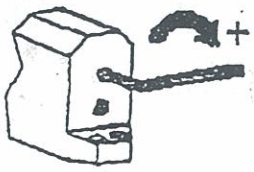

641 - Adjust only if more spring tension is required to positively close and latch door.

640 - Adjust according to chart.

643-646 - Reference chart for recommended door.

	DOOR WIDTH EXTERIOR INCHES	EXTERIOR MM	INTERIOR INCHES	INTERIOR MM	FULL TURNS OF SPRING ADJUSTING NUT
640	—	—	2'-6"	762	0
	2'-6"	762	2'-8"	814	8
	2'-8"	814	3'-0"	1067	12
	3'-0"	1067	4'-0"	1219	15

NOTE: "MAX. 15 TURNS FROM MINIMUM SETTING".

SPRING SIZE	INTERIOR/EXTERIOR	DOOR WIDTH 2'-6" 762	2'-8" 814	3'-0" 914	3'-6" 1016	4'-0" 1219
	INTERIOR	540	644	640	824	
	EXTERIOR	454	535	594	—	

USE LABELED LINES ONLY

ADJUST SPRING TENSION ACCORDING TO THE FOLLOWING CHART.

CLOSER TYPE	MAX. DOOR WIDTH	SPRING SIZE	FULL TURNS OF SPRING ADJUSTING NUT
641	100	3	13
	125	4	15
640	100	3	0
	125	4	9
	150	5	13
	200	6	15

NOTE: "MAX. 15 TURNS FROM MINIMUM SETTING".

10 Press dust cap onto closer spindle arm attachment.

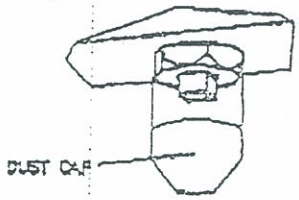

11 Install cover if supplied.

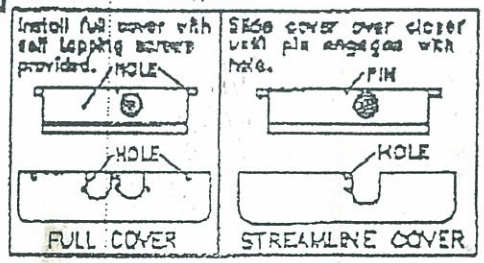

JAN-09-2002 15:01 ALLMAR DIST.LTD 6042597377 P.03/05

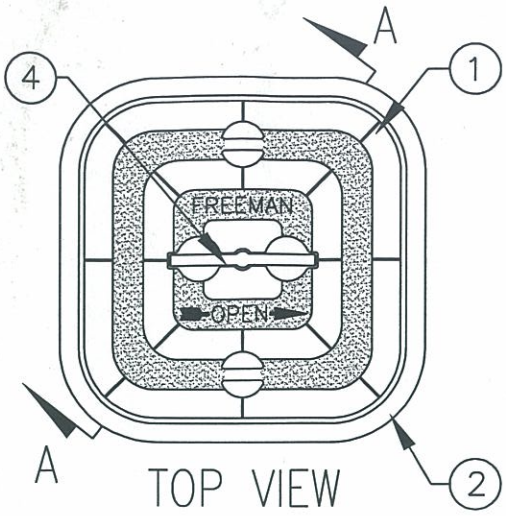

TOP VIEW

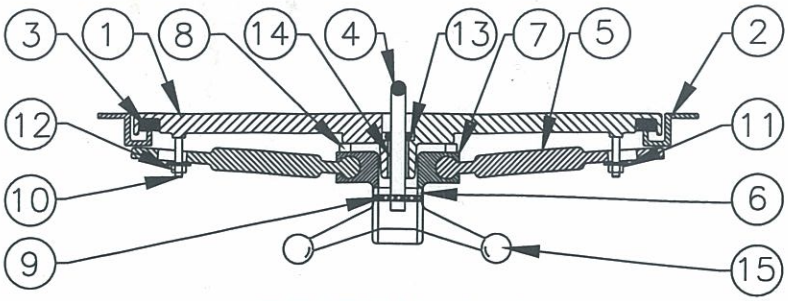

SECTION A–A

HANDLE SHOWN IN UP POSITION

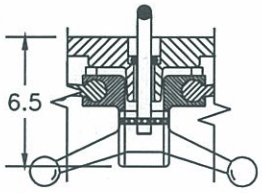

DEPTH DETAIL

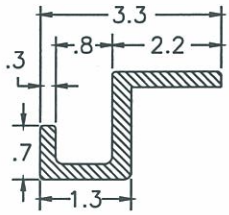

RING DETAIL

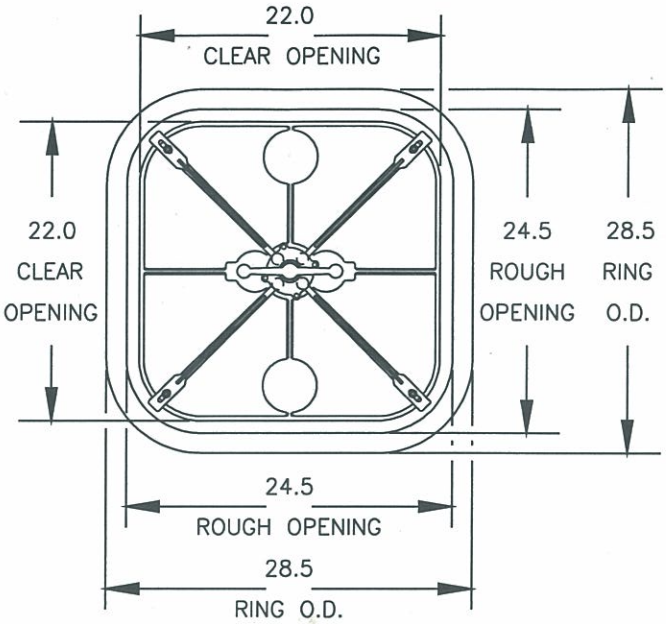

BOTTOM VIEW

10. FOR SPECIFIC INFORMATION CONTACT SALES.
9. COMPLETE ASSEMBLY WEIGHT W/DECK RING, 45LBS/20.4K.
8. DOGGING PRESSURE FULLY ADJUSTABLE, TIGHTEST SEAL IN THE WORLD.
7. HANDLE POSITION TOPSIDE INDICATES WHETHER DOGGING MECHANISM IS IN OPEN OR CLOSED POSITION.
6. ALUMINUM ALLOY MECHANISM SHOWN.
5. FLUSH, WATERTIGHT CONSTRUCTION.
4. INTEGRAL TOPSIDE "T" HANDLE STANDARD, OTHER TOPSIDE ACTUATION AVAILABLE.
3. CAST AL. ALY. COAMING, FLANGE CAN BE DRILLED FOR BOLTED INSTALLATIONS OR WELDED TO ALUMINUM.
2. QUICK-ACTING, MECHANISM ENGAGES OR DISENGAGES IN QUARTER-TURN OF CENTER SPINDLE.
1. 22.0" X 22.0" CLEAR OPENING.

NOTES:

PARTS LIST

FIND NO.	PART NUMBER	DESCRIPTION	MATERIAL
1		HATCH (COVER PLATE)	AL. ALY.
2		FRAME (DECK RING)	AL. ALY.
3		GASKET	NEOPRENE
4		TOPSIDE "T" HANDLE	CRES
5		LOCKING ARM (DOG)	AL. ALY
6		ACTIVATOR	AL. ALY.
7		FOUR HOLE HUB	AL. ALY.
8		CAM BUTTON	DELRIN
9		KNURLED PIN (.25X2.25)	CRES
10		STUD (.375-16)	CRES
11		FLAT WASHER (.375)	CRES
12		LOCK NUT (.375-16 HEX.)	CRES
13		OIL RING (TEFLON COATED)	BUNA RUBBER
14		FLUTED BUSHING	ACETAL/CRES
15		INNER HANDLE (OPTIONAL)	AL. ALY.

FREEMAN
MARINE EQUIPMENT INC.
P.O. BOX F-28336 HUNTER CREEK ROAD
GOLD BEACH, OREGON 97444 U.S.A.
PHONE: 541-247-7078 FAX: 541-247-2114

TITLE: 22" X 22" SQUARE "K" STYLE ALUMINUM CAST HATCH, ALUMINUM DECK RING W/INTEGRAL TOPSIDE HANDLE

DWN BY: M.W.F. | 05/18/98 9:06 AM | DATE: 19SEP96

CAD FILENAME: 2400\2423\0002-01.DWG

FSCM. NO.	DRAWING NUMBER	REV:
64747	2423-0002	–
SCALE: NONE		SHEET 1 OF 1

© ALL RIGHTS RESERVED,
1996 FREEMAN MARINE EQUIPMENT, INC.
SPECIFICATIONS SUBJECT TO CHANGE WITHOUT NOTICE

6

User's Manual

Fiberglass 30 Laboratory Fume Hoods

Models
3030000
3030001
3030002
3030003
3030004
3030005

Register your product online at
www.labconco.com/productreg.html
or return the attached card and
receive **FREE LabbyWear™!**

Labconco's Mascot,
Labby the LABster

Protecting your laboratory environment

LABCONCO®

LABCONCO CORPORATION
8811 PROSPECT AVENUE
KANSAS CITY, MO 64132-2696
800-821-5525, 816-333-8811
FAX 816-363-0130
E-MAIL labconco@labconco.com
HOME PAGE www.labconco.com

Copyright Information

Copyright © 2003 Labconco Corporation. All rights reserved.

Labconco Corporation
8811 Prospect Avenue
Kansas City, Missouri 64132

The information contained in this manual and the accompanying product is copyrighted and all rights are reserved by Labconco Corporation. Labconco Corporation reserves the right to make periodic design changes without obligation to notify any person or entity of such change.

Fiberglass 30 Laboratory Fume Hood Manual #28316

Warranty

Labconco provides a warranty on all parts and factory workmanship. The warranty includes areas of defective material and workmanship, provided such defect results from normal and proper use of the equipment.

The warranty for all Labconco products will expire one year from date of installation or two years from date of shipment from Labconco, whichever is sooner, except the following:

- Purifier® Delta® Series Biological Safety Cabinets, carry a three-year warranty from date of installation or four years from date of shipment from Labconco, whichever is sooner.
- Carts carry a lifetime warranty.
- Glass is not warranted from breakage due to accident or mishandling.

This limited warranty covers parts and labor, but not transportation and insurance charges. In the event of a warranty claim, contact Labconco Corporation or the dealer who sold you the product. If the cause is determined to be a manufacturing fault, the dealer or Labconco Corporation will repair or replace all defective parts to restore the unit to operation. Under no circumstances shall Labconco Corporation be liable for indirect, consequential, or special damages of any kind. This statement may be altered by a specific published amendment. No individual has authorization to alter the provisions of this warranty policy or its amendments. Lamps and filters are not covered by this warranty. Damage due to corrosion or accidental breakage is also not covered.

Limitation of Liability

The disposal and/or emission of substances used in connection with this equipment may be governed by various federal, state, or local regulations. All users of this equipment are required to become familiar with any regulations that apply in the user's area concerning the dumping of waste materials in or upon water, land, or air and to comply with such regulations. Labconco Corporation is held harmless with respect to user's compliance with such regulations.

Contacting Labconco Corporation

If you have questions that are not addressed in this manual, or if you need technical assistance, contact Labconco's Customer Service Department or Labconco's Product Service Department at 1-800-821-5525 or 1-816-333-8811, between the hours of 7:00 a.m. and 6:00 p.m., Central Standard Time.

Visit Labconco's web site at: http://www.labconco.com or email Labconco at: labconco@labconco.com.

Part #28316 Rev -, ECO B433

Product designs are subject to change without notice
© 2003 Labconco Corporation
Printed in U.S.A.

TABLE OF CONTENTS

CHAPTER 1: INTRODUCTION 1
- About This Manual 2
- Typographical Conventions 3
- Your Next Step 4

CHAPTER 2: PREREQUISITES 5
- Location Requirements 6
- Support Requirements 6
- Exhaust Requirements 6
- Electrical Requirements 7
- Service Line Requirements 7
- Space Requirements 7
- Your Next Step 7

CHAPTER 3: GETTING STARTED 9
- Unpacking Your Fume Hood 10
- Removing the Shipping Skid 11
- Sash Weight Release 11
- Installing the Hood on a Supporting Structure & Work Surface 11
- Connecting to the Hood Exhaust System 13
- Connecting the Electrical Supply Source 14
- Connecting the Service Lines 16
- Sealing the Fiberglass 30 Hood to the Work Surface 17
- Certifying the Fiberglass 30 Fume Hood 17
- Your Next Step 18

CHAPTER 4: PERFORMANCE FEATURES AND SAFETY PRECAUTIONS 19
- Performance Features 19
- Safety Precautions 23
- Your Next Step 25

CHAPTER 5: USING YOUR FIBERGLASS 30 27
Operating the Vertical Rising Sash 27
Operating the Blower 28
Operating the Lights 28
Working in your Fiberglass 30 Fume Hood 28
Your Next Step 29

CHAPTER 6: MAINTAINING YOUR FUME HOOD 31
Routine Maintenance Schedule 32
Routine Service Operations 33
Your Next Step 33

CHAPTER 7: MODIFYING YOUR FUME HOOD 35
Installing Work Surfaces and Storage Cabinets 35
Installing Additional Service Fixtures 36
Installing Guardian Digital Airflow Monitor or Guardian Jr. 36
Installing an Electrical Duplex Receptacle 37
Your Next Step 38

CHAPTER 8: TROUBLESHOOTING 39

APPENDIX A: FIBERGLASS 30 COMPONENTS 43

APPENDIX B: FIBERGLASS 30 DIMENSIONS 47

APPENDIX C: FIBERGLASS 30 SPECIFICATIONS 53

APPENDIX D: REFERENCES 57

DECLARATION OF CONFORMITY 61

CHAPTER 1
INTRODUCTION

Congratulations on your purchase of a Labconco Fiberglass 30 Laboratory Fume Hood. Your Fiberglass 30 Laboratory Fume Hood is designed to protect you. It is the result of Labconco's more than 50 years experience in manufacturing fume hoods, and users like you suggested many of its features to us.

The Labconco Fiberglass 30 Fume Hood has been engineered to effectively contain toxic, noxious, or other harmful materials when properly installed. The Fiberglass 30 offers many unique features to enhance safety, performance, and visibility. To take full advantage of them, please acquaint yourself with this manual and keep it handy for future reference. If you are unfamiliar with how fume hoods operate, please review *Chapter 4: Performance Features and Safety Precautions* before you begin working in the fume hood. Even if you are an experienced fume hood user, please review *Chapter 5: Using Your Fume Hood,* which describes your Fiberglass 30 features so that you can use the hood efficiently.

About This Manual

This manual is designed to help you install, use, and maintain your laboratory fume hood. Instructions for installing optional equipment on your hood are also included.

Chapter 1: Introduction provides a brief overview of the laboratory fume hood, explains the organization of the manual, and defines the typographical conventions used in the manual.

Chapter 2: Prerequisites explains what you need to do to prepare your site before you install your laboratory fume hood. Electrical and service requirements are discussed.

Chapter 3: Getting Started contains the information you need to properly unpack, inspect, install, and certify your laboratory fume hood.

Chapter 4: Performance Features and Safety Precautions explains how the laboratory fume hood operates and the appropriate precautions you should take when using the fume hood.

Chapter 5: Using Your Fiberglass 30 discusses the basic operation of your fume hood. Information on how to prepare, use and shut down your fume hood is included.

Chapter 6: Maintaining Your Fiberglass 30 explains how to perform routine maintenance on your fume hood.

Chapter 7: Modifying Your Fiberglass 30 explains how to modify the fume hood or add accessories.

Chapter 8: Troubleshooting contains a table of problems you may encounter while using your laboratory fume hood including the probable causes and suggested corrective actions.

Appendix A: Fiberglass 30 Hood Components contains labeled diagrams of all of the components of the fume hoods.

Appendix B: Fiberglass 30 Hood Dimensions contains comprehensive diagrams showing all of the dimensions for the laboratory fume hoods.

Appendix C: Fiberglass 30 Hood Specifications contains the electrical requirements for laboratory fume hood. Wiring diagrams are also included.

Appendix D: References lists the various resources available that deal with laboratory fume hoods.

Typographical Conventions

Recognizing the following typographical conventions will help you understand and use this manual:

- Book, chapter, and section titles are shown in italic type (e.g., *Chapter 3: Getting Started*).
- Steps required to perform a task are presented in a numbered format.
- Comments located in the margins provide suggestions, reminders, and references.

- Critical information is presented in boldface type in paragraphs that are preceded by the exclamation icon. Failure to comply with the information following an exclamation icon may result in injury to the user or permanent damage to fume hood.

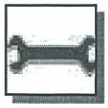

- Critical information is presented in boldface type in paragraphs that are preceded by the wrench icon. These operations should only be performed by a trained certifier or contractor. Failure to comply with the information following a wrench icon may result in injury to the user or permanent damage to your hood.

- Important information is presented in capitalized type in paragraphs that are preceded by the pointer icon. It is imperative that the information contained in these paragraphs be thoroughly read and understood by the user.

Your Next Step

If your Fume Hood needs to be installed, proceed to *Chapter 2: Prerequisites* to ensure your installation site meets all of the requirements. Then, go to *Chapter 3: Getting Started* for instructions on how to install your laboratory fume hood and make all of the necessary connections.

If you would like to review how laboratory fume hoods operate, go to *Chapter 4: Performance Features and Safety Precautions*.

For information on the operational characteristics of your laboratory fume hood, go to *Chapter 5: Using Your Fiberglass 30 Hood.*

If your laboratory fume hood is installed and you need to perform routine maintenance on the cabinet, proceed to *Chapter 6: Maintaining Your Fiberglass 30 Hood.*

For information on making modifications to the configuration of your fume hood, go to *Chapter 7: Modifying Your Fiberglass 30 Fume Hood.*

Refer to *Chapter 8: Troubleshooting* if you are experiencing problems with your fume hood.

CHAPTER 2
PREREQUISITES

Before you install your laboratory fume hood, you need to prepare your site for installation. Carefully examine the location where you intend to install your hood. You must be certain that the area is level and of solid construction. In addition, a dedicated source of electrical power must be located near the installation site.

Carefully read this chapter to learn the requirements for your installation site:

- The location requirements.
- The support requirements.
- The exhaust requirements.
- The electrical power requirements.
- The service line requirements.
- The space requirements.

Refer to *Appendix B: Fiberglass 30 Hood Dimensions* for complete fume hood dimensions.

Refer to *Appendix C: Fiberglass 30 Hood Specifications* for complete laboratory fume hood electrical and environmental conditions, specifications and requirements.

Location Requirements

The fume hood should be located away from traffic patterns, doors, windows, fans, ventilation registers, and any other air-handling device that could disrupt its airflow patterns. All windows in the room should be closed.

Support Requirements

DO NOT install the fume hood on a cart, dolly, or mobile bench. ALL Fiberglass 30 Hood installations must be permanent and stationary. The supporting structure usually consists of a base cabinet and chemically resistant work surface. See Chapter 7 Modifying Your Fiberglass 30 Hood.

Exhaust Requirements

The exhaust duct connection has been designed for 6" nominal duct (6.625" OD) to allow for minimum static pressure loss while operating at 100 fpm face velocities. The 6" diameter exhaust duct also allows for proper transport velocities away from the hood in the 1000 fpm to 2500 fpm range. The proper exhaust volume and static pressure loss are listed next for each hood model:

Fiberglass 30 Hood with Integral Blower, 100 fpm, 310 cfm, capable of overcoming 0.12" external static pressure.

Fiberglass 30 Hood for use with Remote Blower, 100 fpm, 310 cfm, 0.14" static pressure loss.

Fiberglass 30 Hood with Explosion Proof Blower, 100 fpm, 310 cfm, capable of overcoming 0.12" external static pressure.

Proper blower selection can be determined from these exhaust requirements and the total system static pressure loss. Contact Labconco Customer Service for assistance in sizing a blower.

Electrical Requirements

Other than explosion proof models, the Fiberglass 30 Hood models feature internal wiring for the incandescent light assembly and light switch. If your unit has an integral blower, then internal wiring to the blower motor and blower switch is included. Explosion Proof blowers require on site wiring. All internal wiring is terminated at the single point wiring junction box for hook-up by a qualified electrician. Refer to *Chapter 3: Getting Started* and *Appendix C: Fiberglass 30 Specifications* for the wiring diagram for proper electrical installation.

Service Line Requirements

All service lines to the laboratory fume hood should be ¼ inch outside diameter, copper (brass for natural gas), and equipped with an easily accessible shut-off valve, should disconnection be required. If the service line pressure exceeds 40 PSI, it must be equipped with a pressure regulator to reduce the line pressure. Please check with local codes for other requirements.

Space Requirements

The dimensions for the different models are shown in *Appendix B: Fiberglass 30 Hood Dimensions*.

Your Next Step

After you have determined that the location you have selected accommodates the installation and operational requirements of your fume hood, you are ready to begin installation. Proceed to *Chapter 3: Getting Started.*

CHAPTER 3
GETTING STARTED

Now that the site for your laboratory fume hood is properly prepared, you are ready to unpack, inspect, install, and certify your unit. Read this chapter to learn how to:

- Unpack and move your Fiberglass 30 Hood.
- Set up the fume hood with the supporting structure and work surface.
- Connect to an exhaust system.
- Connect the electrical supply source.
- Connect the service lines.
- Seal the Fiberglass 30 Hood to the work surface.
- Arrange certification of your Fiberglass 30 Hood.

Depending upon which model you are installing, you may need common plumbing and electrical installation tools in addition to 5/16", 3/8", 7/16", and 1/2" wrenches, ratchets, sockets, a nut driver set, a flat-blade screwdriver, a Phillips screwdriver, and a carpenter level to complete the instructions in the chapter.

Unpacking Your Laboratory Fume Hood

Carefully remove the shrink-wrap or carton on your fume hood and inspect it for damage that may have occurred in transit. If your unit is damaged, notify the delivery carrier immediately and retain the entire shipment intact for inspection by the carrier.

ited States
te Commerce
sion rules
that claims be
h th livery
with fteen (15)
delivery.

DO NOT RETURN GOODS WITHOUT THE PRIOR AUTHORIZATION OF LABCONCO. UNAUTHORIZED RETURNS WILL NOT BE ACCEPTED.

IF YOUR HOOD WAS DAMAGED IN TRANSIT, YOU MUST FILE A CLAIM DIRECTLY WITH THE FREIGHT CARRIER. LABCONCO CORPORATION AND ITS DEALERS ARE NOT RESPONSIBLE FOR SHIPPING DAMAGES.

Do not discard the shipping skid or packing material for your fume hood until you have checked all of the components and installed and tested the unit.

Do not remove the fume hood from its shipping skid until it is ready to be placed into its final location. Move the unit by placing a flat, low dolly under the shipping skid, or by using a floor jack.

THE FIBERGLASS 30 HOOD MODELS WEIGH BETWEEN 96 TO 129 LBS. (44-59 KG). THE SHIPPING SKID ALLOWS FOR LIFTING WITH A MECHANICAL LIFT TRUCK OR FLOOR JACK. IF YOU MUST LIFT THE FUME HOOD MANUALLY, FOLLOW SAFE-LIFTING GUIDELINES.

NORMALLY, THE FUME HOOD CAN BE SLID OFF A HYDRAULIC LIFT TABLE AND BE PLACED INTO POSITION ON TOP OF THE WORK SURFACE. DO NOT LIFT BY THE FRONT AIR FOIL.

Do not move the hood by tilting it onto a hand truck.

Removing the Shipping Skid

LEAVE THE FUME HOOD ATTACHED TO ITS SHIPPING SKID UNTIL IT IS AS CLOSE TO ITS FINAL LOCATION AS POSSIBLE. MOVE THE HOOD BY USING A SUITABLE FLOOR JACK, OR BY PLACING A FURNITURE DOLLY UNDERDNEATH THE SKID. DO NOT MOVE THE HOOD BY TILTING IT ONTO A HAND TRUCK.

After you verify the fume hood components, move your hood to the location where you want to install it.

Sash Weight Release

To protect the fume hood from damage in shipment, the sash weight has been secured to the back of the fume hood with four (4) screws. Simply remove the screws and make sure the sash cables are on the pulleys before operation of the sash.

NOTE: THE SASH WEIGHT IS MATCHED TO THIS SPECIFIC HOOD AND SHOULD NOT BE EXCHANGED ON ANY OTHER UNIT.

Install the Fiberglass 30 Hood on a Supporting Structure and Work Surface

The Fiberglass 30 Hood is heavy! Use caution when lifting or moving the unit.

When installing the Fiberglass 30 Fume Hood onto a chemically resistant work surface or benchtop, ensure

that the structure can safely support the combined weight of the fume hood and any related equipment. The work surface should be at least as wide as the hood to properly support it. **The work surface is aligned with the back of the fume hood. This will provide the correct spacing under the air foil for proper bypass airflow.**

WARNING: It is important to support the rear of the work surface and fume hood. The cross support provides support for the bottom of the work surface. Install the cross support after the base cabinets and work surface are leveled and before installing the hood.

The following are instructions for mounting a cross support:

1. Level the base cabinets and the work surface. Work surface should be placed flush with the back of the fume hood as shown in Figure 3-1.
2. Scribe a line on the wall or back of the base cabinet to locate the support under the work surface.
3. Mount the support by attaching it to the wall or base cabinet.
4. Place the hood on top of the work surface and cross support.

The work surface should be smooth and durable, such as a chemically-resistant epoxy resin. The surface should be nonporous and resistant to the acids, solvents, and chemicals used.

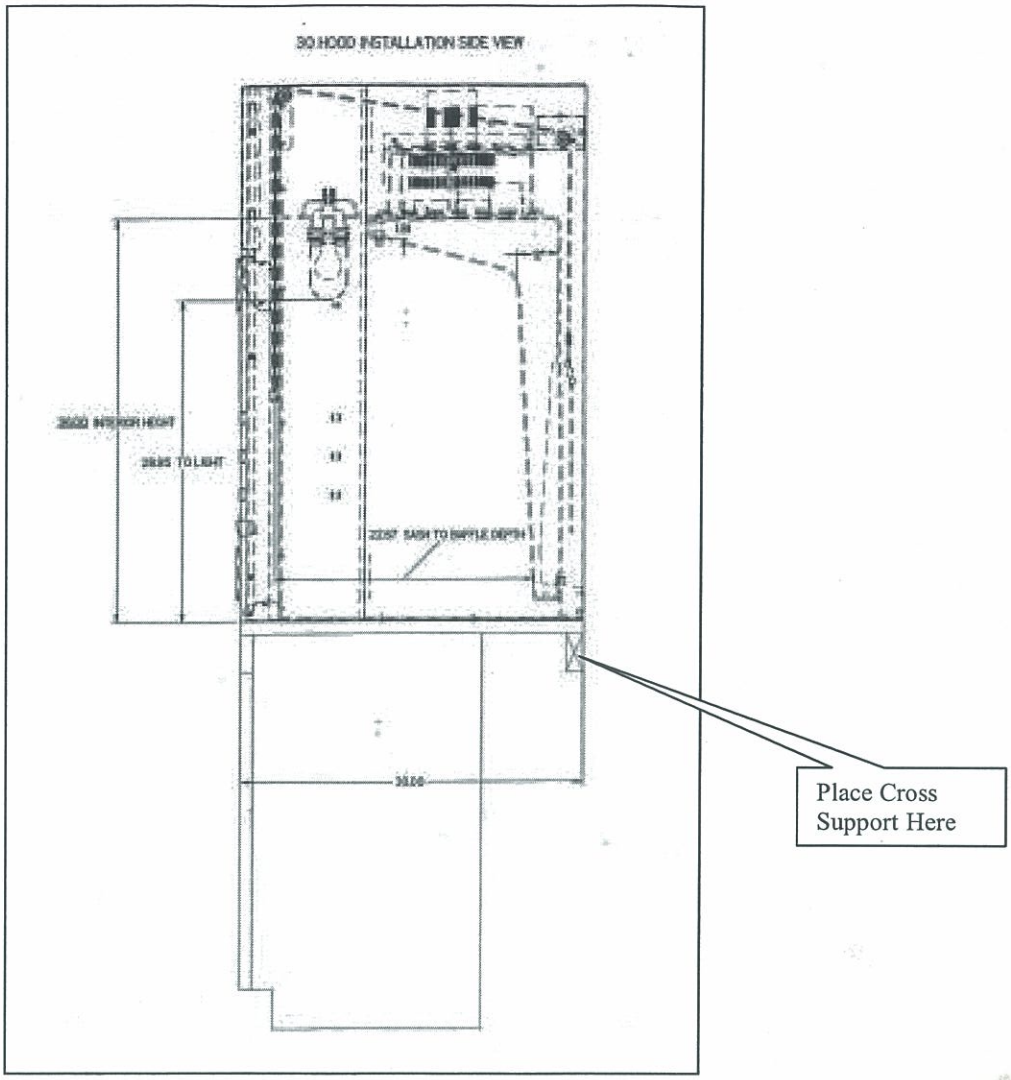

Figure 3-1

Connecting to the Fiberglass 30 Hood Exhaust System

WARNING: The weight of the exhaust ductwork system must be supported independently of the hood superstructure. Do not allow this weight to be supported by the hood structure as damage to the hood may occur.

The exhaust connection should be installed by a qualified HVAC contractor.

The exhaust connection on your hood has been designed for 6" nominal pipe (6.625" OD) to allow for minimum static pressure loss with proper transport velocities away from the hood. Consult Labconco Customer Service should you require help sizing your blower for the exhaust volume and total system static pressure loss. See Chapter 2 for the hood airflow specifications.

The selected exhaust duct material should match the hood procedures and chemicals used to ensure compatibility.

Connecting the Electrical Supply Source to the Fiberglass 30 Fume Hood

Prior to connecting any electrical wiring to the fume hood structure, refer to the hood identification plate for the proper electrical requirements of your specific model.

WARNING: The building electrical supply system for Fiberglass 30 Hoods should include overload protection. A switch or circuit breaker should be in close proximity to the equipment and within easy reach of the operator. The switch or circuit breaker is to be marked as the disconnecting device for the equipment. Consult the NEC-2002 for proper installation.

The identification plate, model number, serial number, and electrical connection boxes are accessible from the front of the fume hood by removing the front panel.

The Fiberglass 30 Hood is normally wired for 115 Volt, 60 Hz, 20 Amp or 230 Volt, 50 Hz, 10 Amp electrical services. The number of circuits varies depending on

the model. All of the electrical connections are terminated at the single point internal junction box for hook-up by a qualified electrician. Refer to the wiring diagram for your Fiberglass 30 Hood in *Appendix C: Fiberglass 30 Fume Hood Specifications.*

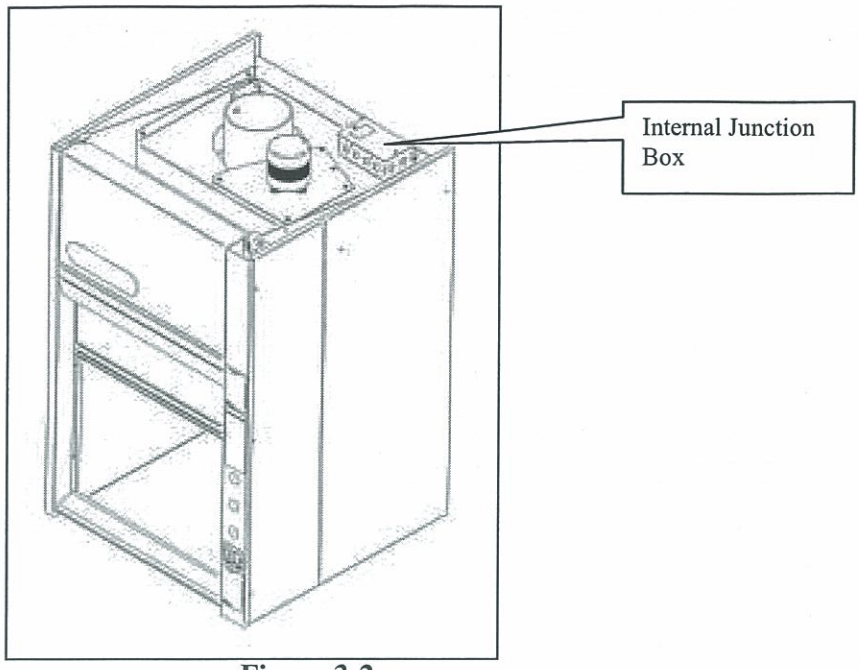

Figure 3-2

All wiring for the fume hood SHOULD be performed by a licensed electrician and conform to all local codes. In most cases, the hood will require the use of shielded conduit to protect the wiring into the hood. The grounding connection shall not be made to the terminal box cover.

The incandescent light has been mounted inside the top liner panel and is sealed from vapors inside the hood structure. To change the incandescent light bulbs in your hood, you must first remove the protective glass. Replace the defective bulbs, and reassemble.

Connecting the Service Lines to the Fiberglass 30 Fume Hood

The hoods with service fixture kits are plumbed from the valve to the hose connector. Supply tubing shall be provided by the qualified installer. Tubing can enter the hood from above, through the back, or through the work surface to make these connections to the service fixtures.

NOTE: Inspect all fittings for leakage. Tighten the fittings slightly if needed.

CAUTION: Do not use oxygen with any standard service fixture. Contact Labconco Customer Service for oxygen fixture information.

Should access to the hood plumbing fixture bodies be required, remove the service access plate on the side of the hood by loosening screws. The valve body will be fully exposed for any service work that may be necessary. The service fixture kits on your laboratory hood are designed for use with the following services:

- Air
- Cold Water
- Hot Water
- Natural Gas – See caution below
- Vacuum

WARNING: Contact Labconco Customer Service directly before using any service other than those listed above in these valves to assure full compatibility.

CAUTION: Natural gas should be used only in the service fixture that has been pre-plumbed with brass tubing. Sulfur content of the gas could cause deterioration of standard copper supply lines.

Sealing the Fiberglass 30 Hood to the Work Surface

When the hood has been set in place, ducted, wired, and plumbed, it should be sealed at the work surface to prevent spilled materials from collecting under the walls of the hood. Materials such as silicone sealants are recommended to seal the hood structure.

Certifying the Fiberglass 30 Fume Hood

The combination of your laboratory hood, exhaust ductwork, and exhaust blower give you the flexibility to change the airflow at the sash opening of your hood. To determine the actual face velocity at the sash opening, airflow velocity readings will need to be taken. This should be done across the sash opening of the hood in accordance with the *Industrial Ventilation Manual* section on laboratory hoods. (See Appendix D – Reference) Labconco recommends an average face velocity at the sash opening of 80 to 100 feet per minute. Consult Chapter 2 for proper airflow volumes for your particular model.

The Fiberglass 30 Fume Hood has been tested per ASHRAE 110-1995. All hoods achieve an "as manufactured rating" of less than 0.10 part per million (ppm) at 4 liters per minute (lpm); AM<0.10 (consult Labconco for individual fume hood ratings). For "field use" ASHRAE testing by a certified technician, contact Labconco Customer Service.

NOTE: Face velocity profiles and smoke testing should be done periodically to ensure safe performance.

Your Next Step

After your fume hood has been installed and certified, you are ready to proceed to *Chapter 4: Performance Features and Safety Precautions*.

Chapter 4
Performance Features And Safety Precautions

Performance Features:

The Fiberglass 30 Laboratory Hood is designed to meet the needs of the laboratory scientist. A fully featured by-pass hood with baffle and air foil can effectively contain toxic, noxious, or other harmful materials when properly installed. The by-pass airflow feature allows the hood face velocity to remain relatively stable as the sash is closed.

The air foil sweeps the worksurface to remove heavier than air contaminants.

1. **Unique sash provides maximum visibility of 28" high while conserving energy by limiting sash travel to 20"**. Vertical-rising sash may be raised from a closed to 20" operating height. Exhaust volume, and blower sizing is based on the 20" height.
2. **By-pass airflow design** ensures relatively stable face velocities.
3. **Large usable interior work depth and interior height of 36"** provides ample working space.
4. **Baffle** (not shown) directs airflow to the rear of the interior to provide efficient airflow. The baffle may be removed for cleaning purposes only.
5. **Lift-Away™ front panel** provides easy access to electrical wiring, and sash weights.
6. **Incandescent lighting** provides ample illumination inside the fume hood. No lighting is provided on explosion proof models.
7. **Low mounted, factory-wired light and blower switches** are ADA compliant. No switches are provided on explosion-proof models.
8. **Curved Air Foil** allows air to sweep the work surface for maximum containment.
9. **Corner posts** provide maximum visibility and the flexibility to add services after installation.
10. **All hoods are factory prepared for up to 3 service fixtures**. Field installed by removing side access panel.
11. **Removable side access panel** for servicing valves and electrical connections.
12. **All hoods are factory prepared for one electrical duplex.** A duplex can be field mounted on the right corner post. Receptacles are field-wired to the single point junction box.
13. **Shipped fully assembled** and eliminates the need for costly onsite assembly.

14. **Accessory Guardian™ Digital Airflow Monitor** or **Guardian Jr. Monitor** continuously monitors face velocity. An audio/visual alarm alerts the user to low airflow conditions. The right corner post is factory prepared to accommodate the Guardian Monitor (sold separately).
15. **Frame of epoxy-coated steel and aluminum** is durable and corrosion resistant.
16. **Exhaust connection**. The hood features 6" (6.625" OD pipe) exhaust connections sized to allow for a minimum static pressure loss through the hood structure while providing a good transport velocity through the exhaust system.
17. **Single point junction box** provides a single connection point for electrical wiring connections.
18. **Convenient integral blower motor** is readily accessible on integral blower models.

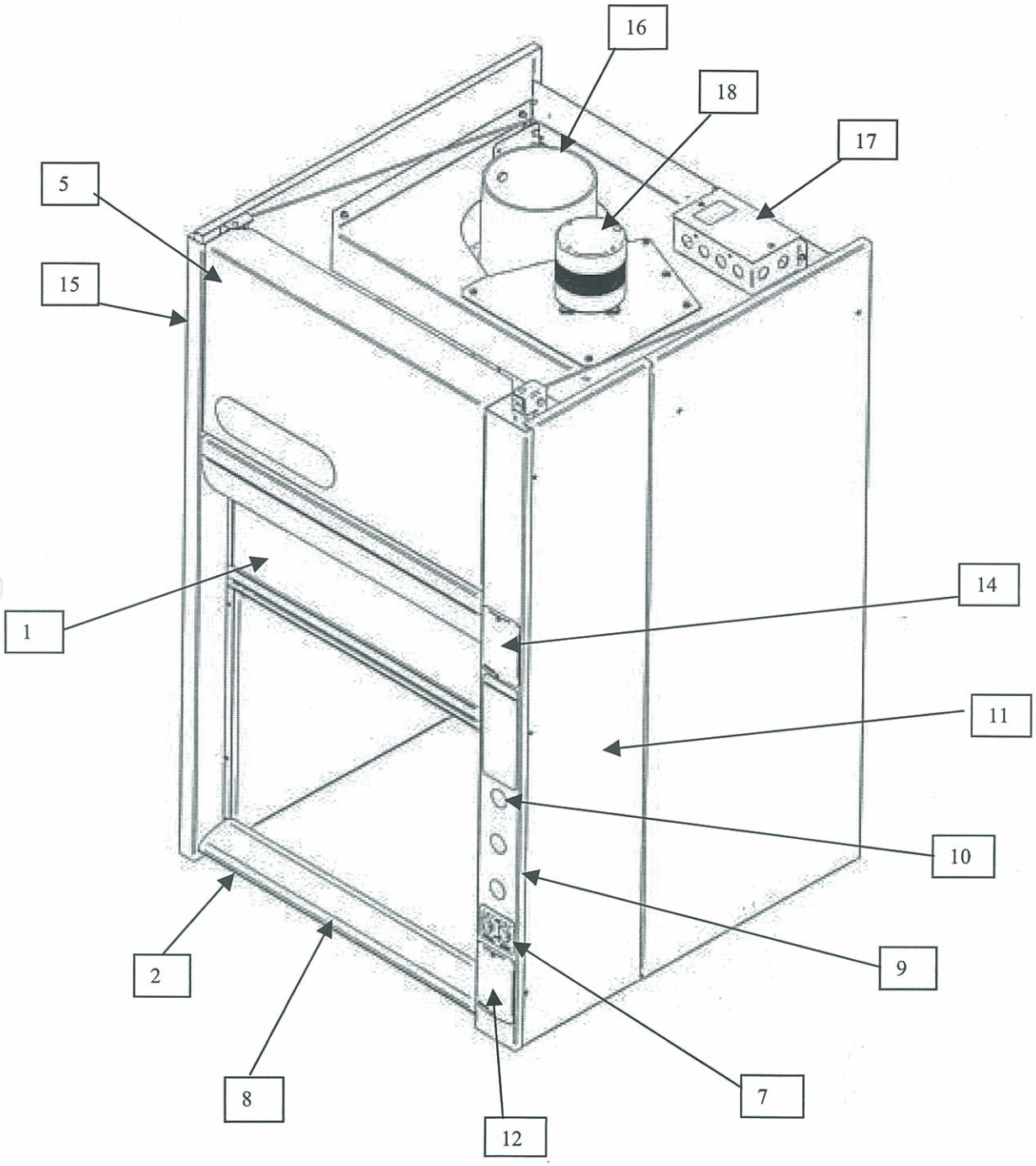
16
18
17
5
15
14
1
11
10
9
2
8
7
12

Safety Precautions

Although the laboratory hood has been engineered to maintain optimum operator safety, caution should always be used while working in the hood. Prior to using the hood, check to make sure that the exhaust blower is operating and that air is entering the hood at its specified face velocity.

USE GOOD HOUSEKEEPING IN THE HOOD AT ALL TIMES. CLEAN UP SPILLS IMMEDIATELY. PERIODICALLY CLEAN HOOD INTERIOR, INCLUDING LIGHT GLASS PANEL. REPLACE BURNED OUT LIGHT BULBS TO MAINTAIN MAXIMUM ILLUMINATION.

DO NOT OVERLOAD THE WORK SURFACE WITH APPARATUS OR WORK MATERIAL. THE SAFE OPERATION OF THE LABORATORY HOOD IS BASED UPON HAVING PROPER AIRFLOW THROUGH THE STRUCTURE. DO NOT PLACE LARGE, BULKY OBJECTS SUCH AS BLOCK HEATERS, DIRECTLY ON THE HOOD WORK SURFACE. INSTEAD, ELEVATE THE OBJECT 2" TO 3" ON BLOCKS TO ALLOW A FLOW OF AIR UNDER THE OBJECT AND INTO THE LOWER REAR BAFFLE EXHAUST SLOT. ENSURE BLOCKS ARE LEVEL AND SECURED IN PLACE.

Blocking the bottom of the baffle at the rear of hood will change the airflow pattern in the hood causing turbulence and possible leakage at the face of the hood. (Don't store containers or supplies against the baffle, as this will affect airflow through the hood).

Avoid placing your head inside hood. Keep hands out of hood as much as practical.

Always work as far back in the hood as possible. It is best to keep all chemicals and apparatus 6" inside the front of the hood.

Only explosion-proof models feature explosion-proof electrical components. Therefore, use of flammable or explosive materials in quantities above the explosive limit are not recommended.

Do not work with chemicals in this hood without the exhaust system running. Do not store chemicals in a fume hood.

Perchloric acid use in this hood is prohibited.

High-level radioisotope materials are prohibited for use in this hood.

AVOID CROSS DRAFTS AND LIMIT TRAFFIC IN FRONT OF THE HOOD. AIR DISTURBANCES CREATED MAY DRAW FUMES OUT OF THE HOOD.

The use of heat-generating equipment in this hood without the exhaust system operating properly can cause damage to the hood.

The Fiberglass 30 Laboratory Hood should be certified by a qualified certification technician before it is initially used. The hood should be re-certified whenever it is relocated, serviced or at least annually thereafter.

Ensure that the unit is connected to electrical service in accordance with local and national electrical codes. Failure to do so may create a fire or electrical hazard. Do not remove or service any electrical components without first disconnecting the hood from electrical service.

Proper operation of the fume hood depends largely upon the hood's location and the operator's work habits. Consult the *Reference Manual in Appendix D.*

Your Next Step

After you understand the theory of operation and safety precautions, you are ready to proceed to *Chapter 5: Using Your Fiberglass 30 Fume Hood.*

Chapter 5
Using Your Fiberglass 30 Fume Hood

Operating the Vertical-Rising Sash

Because of the Fiberglass 30 Hood counterbalanced sash mechanism, it will take only a few pounds of force to move the sash up or down, and you can operate the sash smoothly with one or two hands positioned any where along the handle. The vertical-rising sash may be raised to a maximum 20" operating height. The airflow requirements should be sized for the 20" operating height.

Operating the Blower

Your Fiberglass 30 Fume Hood utilizes a remote style blower or integral blower, which can be activated by turning the blower switch to "ON." You can validate the hood performance by watching smoke drawn into the hood face opening. Explosion-proof models do not have a switch or wiring as this is field installed.

Operating the Lights

Your Fiberglass 30 Fume Hood is equipped with a factory-wired incandescent light to illuminate the hood interior. Simply turn the light switch to "ON" to operate. Explosion-proof models do not have a light.

Working in your Fiberglass 30 Fume Hood

Planning

- Thoroughly understand procedures and equipment required before beginning work.
- Arrange for minimal disruptions, such as room traffic or entry into the room while the hood is in use.

Start-up

- Turn on incandescent light and hood blower.
- Slowly raise the sash.
- Check the baffle air slots for obstructions.
- Allow the hood to operate unobstructed for 5 minutes.
- Wear a long sleeved lab coat and rubber gloves. Use protective eyewear. Wear a protective mask if appropriate.

Loading Materials and Equipment

- Only load the materials required for the procedure. Do not overload the hood.
- Do not obstruct the front air foil, or rear baffle slots.
- Large objects should not be placed close together and spaced above the work surface to permit airflow to sweep under the equipment.

- After loading the hood, wait one minute to purge airborne contaminants from the work area.

Work Techniques

- Keep all materials at least 6 inches inside of the sash, and perform all contaminated operations as far to the rear of the work area as possible.
- Segregate all clean and contaminated materials in the work area.
- Avoid using techniques or procedures that disrupt the airflow patterns of the hood.

Final Purging

- Upon completion of work, the hood should be allowed to operate for two to three minutes undisturbed, to purge airborne contaminants from the work area before shutting down blower.

Unloading Materials and Equipment

- Objects in contact with contaminated material should be surface decontaminated before removal from the hood.
- All open trays or containers should be covered before being removed from the hood.

Shutdown

- Turn off the incandescent light and hood blower, and then close the sash.

Your Next Step

After you understand how to operate and work in the fume hood, you are ready to proceed to *Chapter 6: Maintaining Your Fiberglass 30 Fume Hood.*

Chapter 6
Maintaining Your Fiberglass 30 Fume Hood

Now that you have an understanding of how to work in the fume hood, we will review the suggested maintenance schedule and the common service operations necessary to maintain your fume hood for peak performance.

Only trained and experienced certification technicians should perform some of the service operations after the fume hood has been properly decontaminated. DO NOT attempt to perform these operations if you are not properly trained. The wrench icon precedes the service operations that require qualified technicians.

Routine Maintenance Schedule

Weekly

- Using ordinary dish soap to clean the surface inside of the fume hood, and the work surface.
- Using an appropriate glass cleaner, clean the sash and all glass surfaces.
- Operate the fume hood blower, noting the airflow velocity through the hood using a source of visible smoke.

Monthly (or more often as required)

- Determine the actual face velocity through the sash opening of the hood where the average reading should be at the specified velocity. (Use calibrated thermal anemometer or other approved apparatus).
- Using a damp cloth, clean the exterior surfaces of the hood, particularly the front of the hood, to remove any accumulated dust.
- Check all service valves, if so equipped, for proper operation.
- The hood baffles should be checked for blockages behind them to ensure that the hood is maintaining proper airflow.
- All weekly activities.

Annually

- Have the fume hood recertified by a qualified certification technician. See *Certifying the Fiberglass 30 Fume Hood in Chapter 3*.
- All monthly activities.

Biannually

- The sash assembly should be checked to ensure proper operation and to make sure there are no signs of abnormal wear on the sash pulleys, cables and clamps.

Routine Service Operations

Front Panel Removal:

1. Simply lift the front panel up and then away from the hood to provide access to the top.

Changing the Incandescent Lamp:

1. Turn light switch to "OFF".
2. Raise the sash and reach inside the fume hood to unscrew the clear glass globe that protects the incandescent bulb.
3. Install the new incandescent bulb and then reverse the removal procedure.

Your Next Step

After you understand the maintenance procedures, you are ready to proceed to *Chapter 7: Modifying Your Fiberglass 30 Fume Hood.*

Chapter 7
Modifying Your Fiberglass 30 Fume Hood

There are several ways to modify the fume hood for your individual requirements. These include the addition of work surfaces, service fixtures, air monitor, and electrical duplex outlets. See *Appendix A: Fiberglass 30 Hood Components* for installation location.

Installing Work Surfaces and Storage Cabinets

An optional work surface is available when installing the hood on storage cabinets. Contact Labconco Customer Service for ordering information on these 30" work surfaces and storage cabinets.

4882806	Work Surface	30" x 30"
9902200	Solvent Cabinet	30"
9901200	Acid Cabinet	30"
9900200	Base Cabinet	30"

Installing Additional Service Fixtures

Additional service fixtures can be installed in the available service fixture holes in the right sidewall and corner post. The fume hood is factory set to accept up to three valves. Contact Labconco Customer Service for information. The following service fixture kits are available:

2832600	Cold Water (CW) – Green
2832601	Hot Water (HW) – Red
2832602	Deionized Water (DW) – White
2832603	Vacuum (VAC) – Yellow
2832604	Air (AIR) – Orange
2832605	Gas (GAS) – Blue
2832606	Nitrogen (NIT) – Brown
2832607	Argon (ARG) – Gray
2832608	Steam (STM) - Black

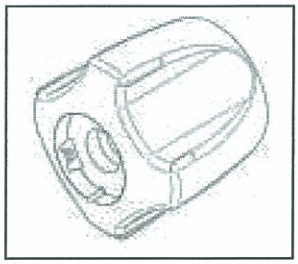

Figure 7-1 - Knob

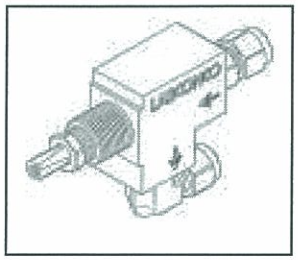

Figure 7-2 - Valve

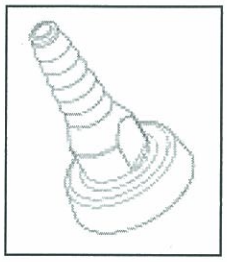

Figure 7-3 – Hose Connector

Installing Guardian™ Digital Airflow Monitor or Guardian™ Jr. Airflow Monitor

The Guardian Digital Airflow Monitor P/N 9743201 and 9743205 or Guardian Jr. Airflow Monitor P/N 9743202 and 9743206 allows you to continuously monitor face velocity through the fume hood opening. The fume hood right corner post is factory prepared to mount either monitor. Contact Labconco Customer Service to order.

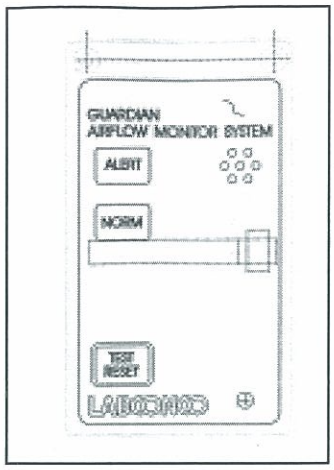

Figure 7-4

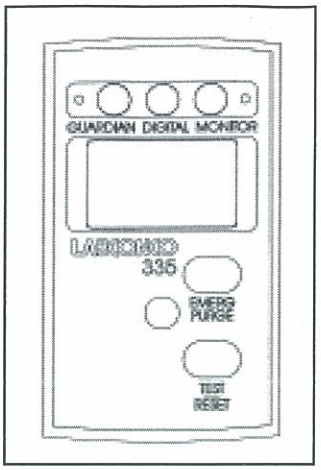

Figure 7-5

Installing an Electrical Duplex Receptacle

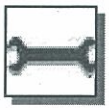

If you ordered your hood and want an electrical duplex outlet, then you can have one installed in the field by a qualified electrician. Contact Labconco Customer Service for ordering information. (Not acceptable on explosion-proof hoods). The following duplex kits are available:

2834800 115V, 20A Duplex Kit
2834801 115V, 20A GFCI Duplex Kit

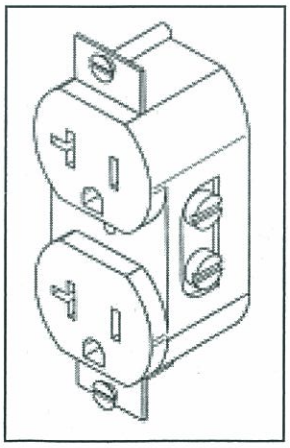

Figure 7-6

Your Next Step

After you understand the modifying procedures, you are ready to proceed to *Chapter 8: Troubleshooting*.

CHAPTER 8
TROUBLESHOOTING

Refer to the following table if your fume hood fails to operate properly. If the suggested corrective actions do not solve your problem, contact Labconco for additional assistance.

PROBLEM	CAUSE	CORRECTIVE ACTION
Remote blower and light won't operate	Wires not connected at junction box or switches.	Check connection of switches.
		Check connection to control box on top of unit.
	Circuit breakers tripped in building electrical supply.	Reset circuit breakers.
Remote blower won't operate, but light works	Blower wiring is disconnected.	Inspect blower wiring and switch.
	Belt broken.	Replace belt.
	Blower motor is defective.	Replace blower motor.
Fume hood blower operates but light will not operate	Lamp not installed correctly.	Inspect lamp installation.
	Lamp is defective.	Replace lamp.
	Circuit breaker in building is tripped.	Reset the circuit breaker.

PROBLEM	CAUSE	CORRECTIVE ACTION
Fume hood blower operates but light will not operate	Lamp wiring is disconnected.	Inspect lamp wiring.
	Defective lamp.	Replace lamp.
Contaminants outside of fume hood	Improper user techniques for the fume hood.	See "Certifying the Hood" Chapter 3 and "Safety Precautions" Chapter 4 sections in the manual. (Ref. Appendix D)
	Restriction of the baffle air slots or blockage of the exhaust outlet.	Remove baffles to ensure that all air slots and the exhaust outlet are unobstructed.
	External factors are disrupting the fume hood airflow patterns or acting as a source of contamination.	See "Location Requirements" Chapter 2, "Certifying the Hood" Chapter 3, and "Safety Precautions" Chapter 4 sections of this manual. (Ref. Appendix D)
	Fume hood has improper face velocity.	Have fume hood re-certified and check remote blower exhaust system. Hood should have average face velocity of 80-100 fpm.
Vertical-rising sash no longer operates smoothly	Cable is frayed or plastic protection is damaged.	Inspect cable and replace cable if worn or damaged immediately; otherwise injury could result.
	Pulley bearing is damaged.	Replace pulley, bearing or add grease.
	Cable has slipped off the pulleys.	Re-install, cable must be replaced immediately if damaged.
	Weight has broken pulleys.	Replace weight pulleys.

PROBLEM	CAUSE	CORRECTIVE ACTION
Electrical duplex outlet no longer has power	Wires not connected or faulty duplex.	Check wire connection or replace duplex.
	Circuit breakers tripped in building electrical supply.	Reset circuit breakers.
Service valves no longer operate	Faulty building supply.	Inspect building supply shut off valves and appropriate pressures below 40 PSI.
	Valve no longer operates.	Replace valve and check for leaks.
	Supply line or outlet line has leaks.	Inspect line for leaks and fix any leaking plumbing connections.

Appendix A
Fiberglass 30
Hood Components

Illustration A-1 indicate the location of the following service parts:

Fiberglass 30 Hood Replacement Parts

Item	Quantity	Part No.	Description
1A	1	9817000	Valve, Labconco ¼" Compression Fitting
1B	1	9817002	Valve, Labconco Deionized ¼" Compression Fitting
1C	1	9818000	Nut, Valve Mtg. (Labconco)
2	1	9818700-01-02-03-04-05-06-07-08	Knobs (Gray, Green, Blue, Orange, Yellow, Red, White, Black, Brown)
3A	1	9818800	Hose Barb, Gray – Neutral or Argon – NOT SHOWN
3B	1	9818801	Hose Barb, Green – Cold Water – NOT SHOWN
3C	1	9818802	Hose Barb, Blue – Gas – NOT SHOWN
3D	1	9818803	Hose Barb, Orange – Air – NOT SHOWN
3E	1	9818804	Hose Barb, Yellow – Vacuum – NOT SHOWN
3F	1	9818805	Hose Barb, Red – Hot Water – NOT SHOWN
3G	1	9818806	Hose Barb, White – Deionized Water – NOT SHOWN
3H	1	9818807	Hose Barb, Black – Neutral or Steam – NOT SHOWN
3I	1	9818808	Hose Barb, Brown – Nitrogen – NOT SHOWN
3J	1	9819000	Nut, Hose Barb – NOT SHOWN
4	1	9825500	Label, Knob (contains all labels)
5	1	9818900	Lens, Knob
6A	1	2832600	Fixture Kits – (CW)
6B	1	2832601	Fixture Kits – (HW)
6C	1	2832602	Fixture Kits – (DI)
6D	1	2832603	Fixture Kits – (VAC)
6E	1	2832604	Fixture Kits – (AIR)
6F	1	2832605	Fixture Kits – (GAS)
6G	1	2832606	Fixture Kits – (NIT)
6H	1	2832607	Fixture Kits – (ARG)
6I	1	2832608	Fixture Kits – (STM)
7A	1	2834800	115V, 20A Duplex Kit
7B	1	2834801	115V, 20A GFCI Duplex Kit

Item	Quantity	Part No.	Description
7C	1	9818200	Cover Plate 115V Duplex
7D	1	9818100	Cover Plate, 115V GFCI
7E	1	9818300	Wallplate, Blank
8A	1	1273600	Bulb, 115V
8B	1	1273700	Bulb, 230V
8C	1	4849800	Light Fixture Assy complete with wiring, parts 8D through 8G
8D	1	4849900	Light Fixture – a) Body & Socket VFB15, b) Pendent Cover 1/2" VP1, c) Globe, 150W, 264–0006-9909
8E	1	4850000	Wiring Harness, Light
8F	1	1279700	Gasket, Base
8G	1	1279800	Gasket, Globe
9A	1	1302300	Switch, Rocker
9B	1	1327500	Switch, Plug (Fills cutout without switch)
10A	1	2834400	Wiring Harness, Main 115V
10B	1	2834500	Wiring Harness, Main 230V
11	1	2834000	Label Set, Corner Post
12	1	2834100	Label, Front Panel
13	1	2831400	Front Panel
14A	1	2833000	Motor Plate – 115V only
14B	1	2831700	Motor Plate, 230V, 115V, EP - 230V, EP
15A	1	2807100	Motor, 115V
15B	1	1203600	Motor, 230V
15C	1	1200400	Motor, 115 VEP
15D	1	1211000	Motor, 230V EP
15E	1	1852300	Reducing Bushing – 230V only
15F	4	1662600	Rubber Grommet – 115V only
16A	1	1450000	Wheel, Blower – 115V only
16B	1	4716200	Wheel, Blower – 230V, 115V – EP, 230V – EP
17	1	2833400	Removable Side Panel – Right
18	1	2831900	Side Panel – Right
19	1	2832000	Side Panel – Left
20	1	2832500	Sash Glass Assembly
21	1	2833800	Sash Weight
22A	1	1861400	Pulley – 1-3/16" Dia.
22B	1	3627500	Thrust Washer
23	2	4949902	Cable, Sash
24	4	1920100	Clamp, Cable Replacement
25	2	1972100	S-Hook
26	1	2831500	Air Foil
27	2	1934300	Air Foil Spacer Stop
28	2	9713300	Rubber Bumper – Sash Handle
29A	1	2833500	Bracket, Cable Front – Right
29B	1	2833501	Bracket, Cable Front – Left
29C	1	1663200	Rubber Bumper – Upper Sash Stop
30	1	2831100	Corner Post, Right
31	1	2831200	Corner Post, Left
32	1	2831300	Header
30	1	9724500	Sash Stop Kit
31	1	1663200	Upper Sash Bumper
32	1	2831300	Header

Figure A-1

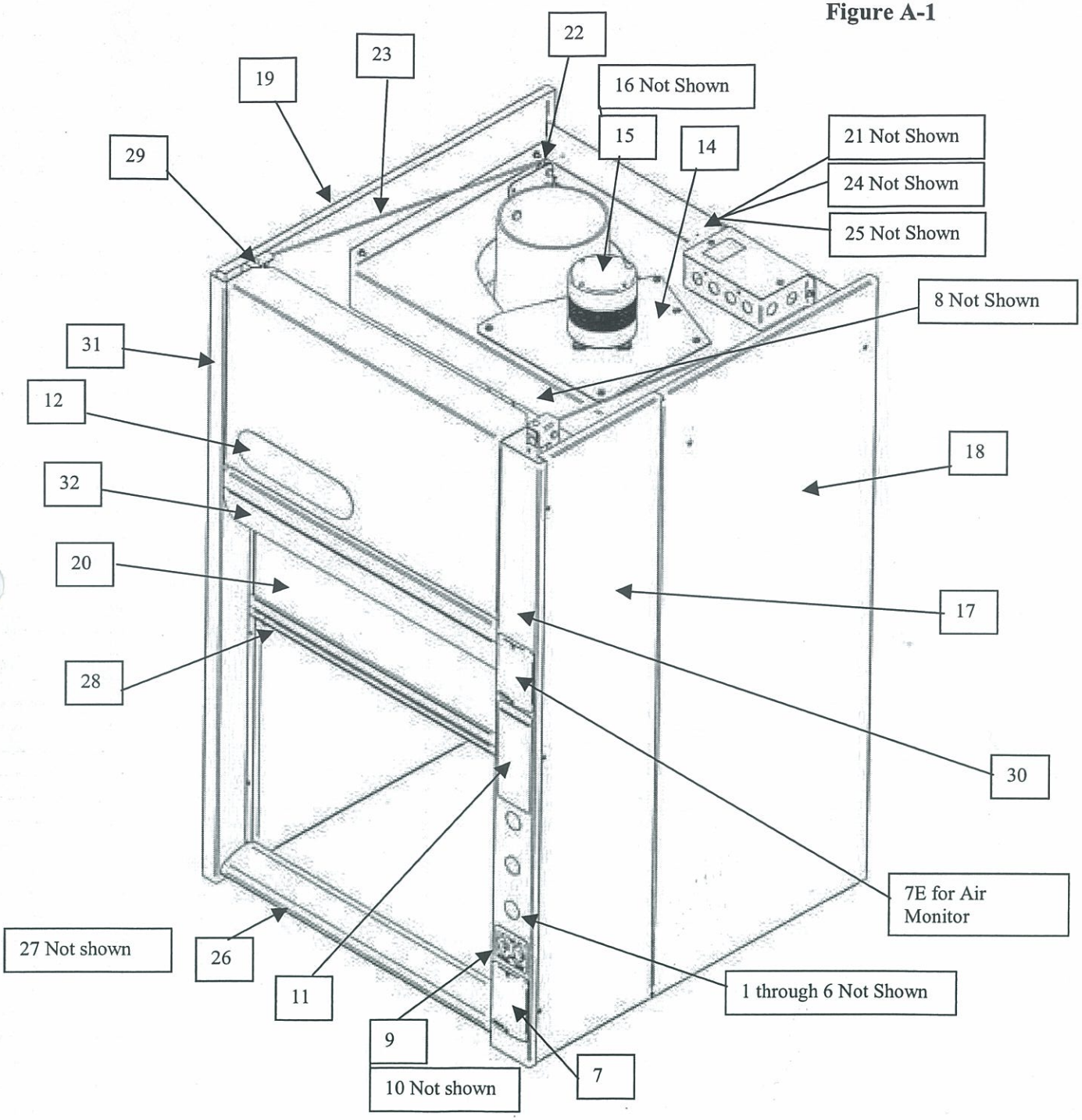
22
23
19
16 Not Shown
15
14
21 Not Shown
24 Not Shown
25 Not Shown
29
8 Not Shown
31
12
18
32
20
17
28
30
7E for Air Monitor
27 Not shown
26
11
1 through 6 Not Shown
9
10 Not shown
7

APPENDIX B
FIBERGLASS 30 HOOD DIMENSIONS

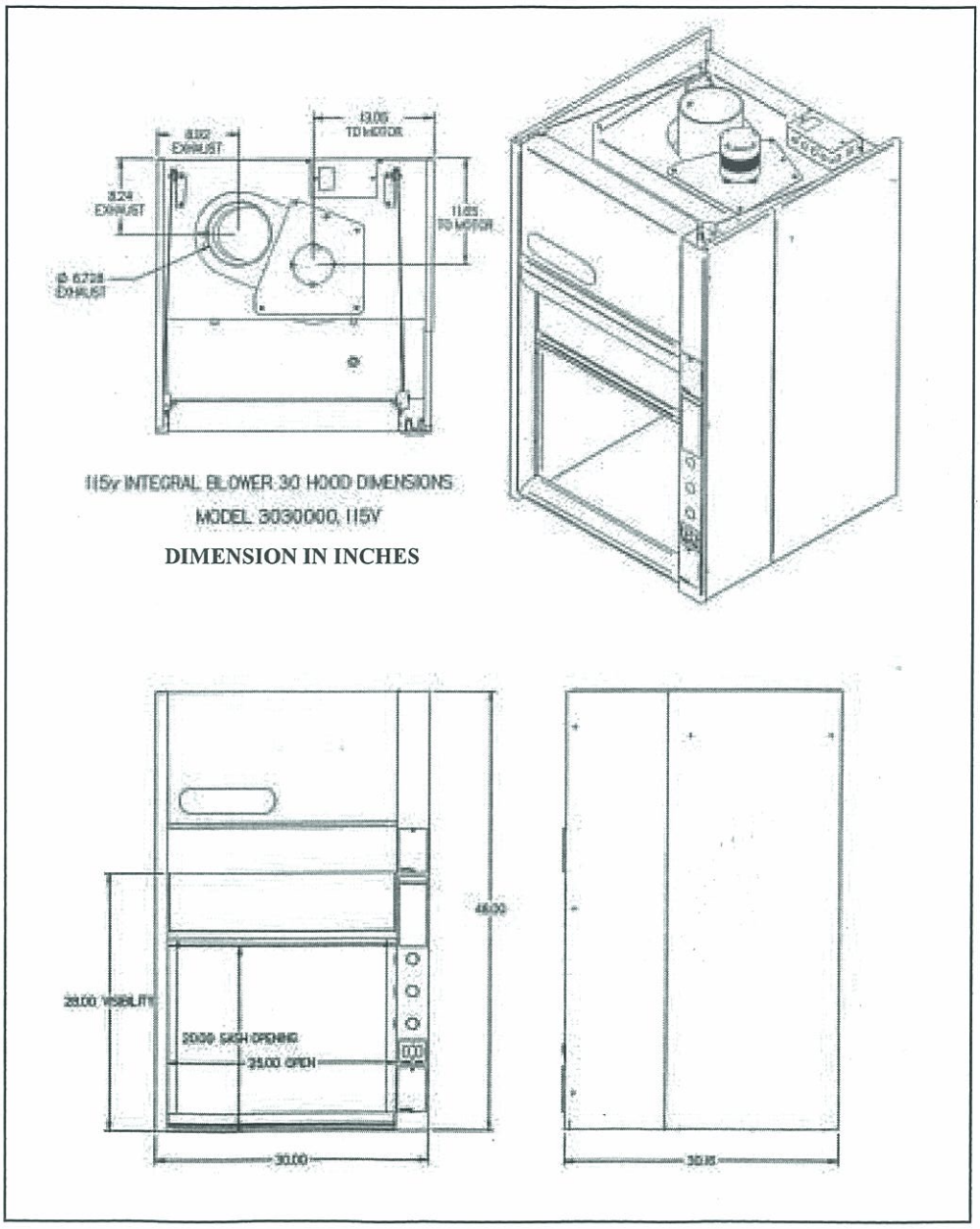

Figure B-1

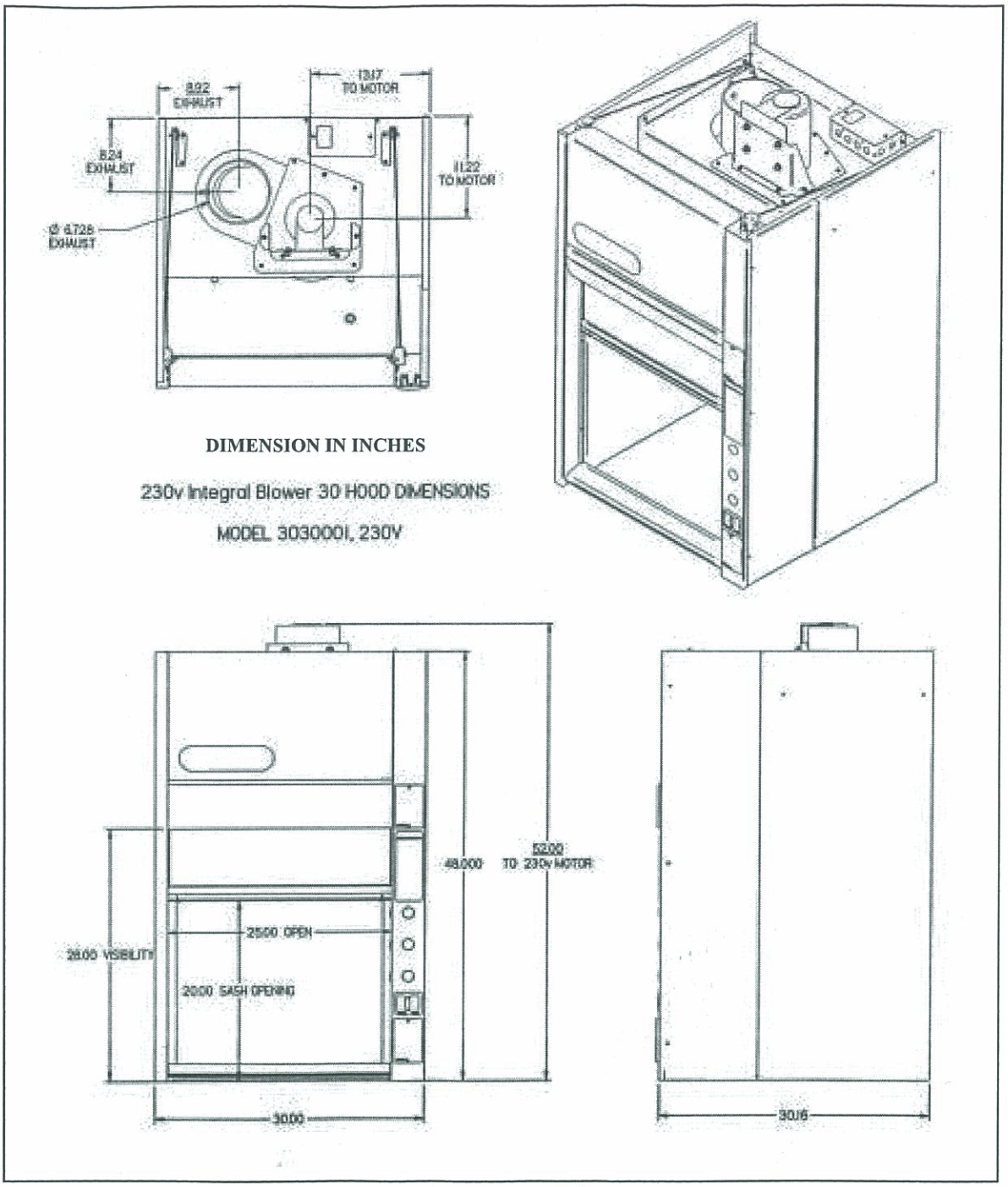
8.92
EXHAUST
13.17
TO MOTOR
8.24
EXHAUST
11.22
TO MOTOR
Ø 4.728
EXHAUST
DIMENSION IN INCHES
230v Integral Blower 30 HOOD DIMENSIONS
MODEL 303000I, 230V
48.000
52.00
TO 230v MOTOR
25.00 OPEN
28.05 VISIBILITY
20.00 SASH OPENING
30.00
30.16

Figure B-2

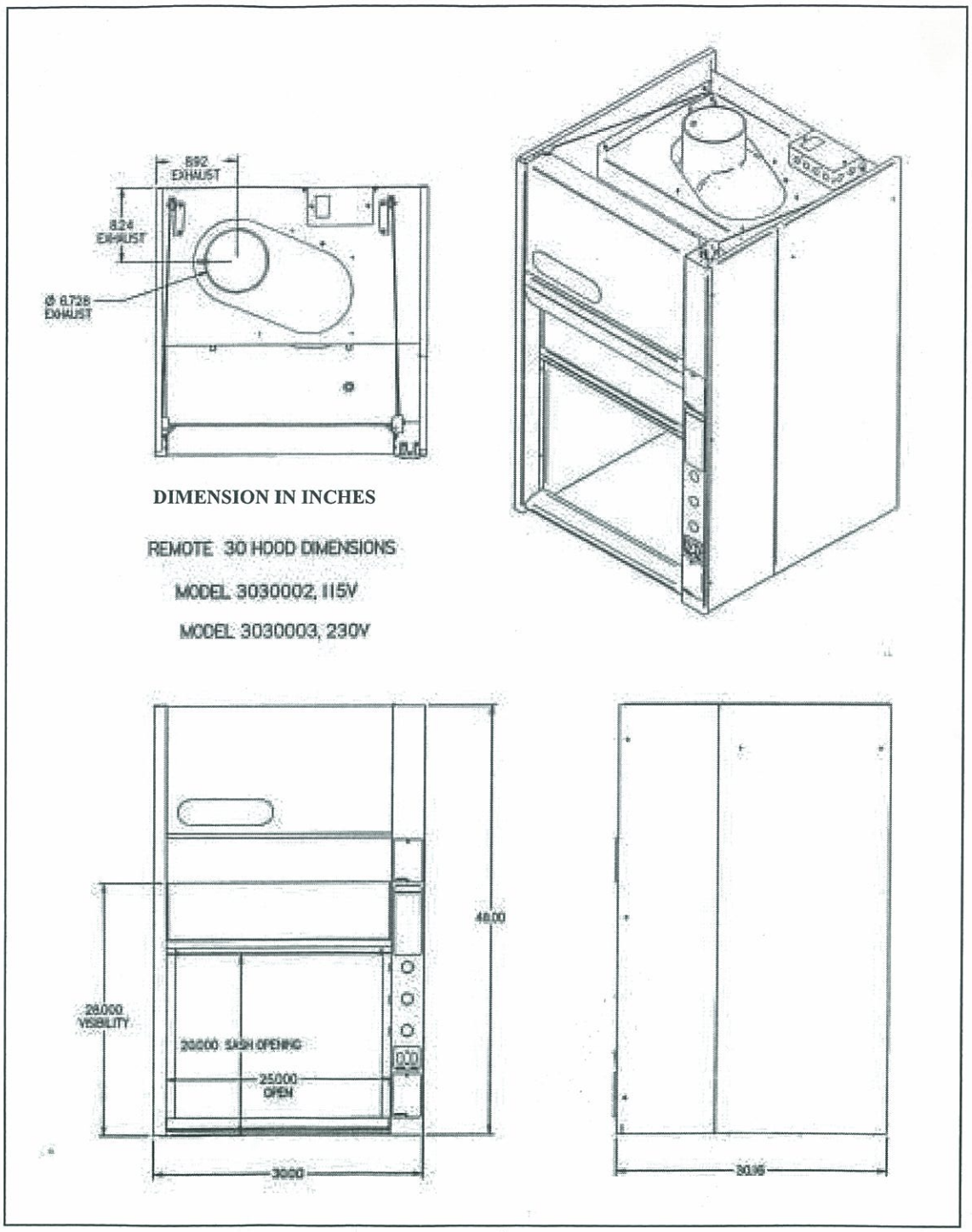
8.92
EXHAUST
8.24
EXHAUST
Ø 6.728
EXHAUST
DIMENSION IN INCHES
REMOTE 30 HOOD DIMENSIONS
MODEL 3030002, 115V
MODEL 3030003, 230V
48.00
26.000
VISIBILITY
20.000 SASH OPENING
25.000
OPEN
30.00
30.00

Figure B-3

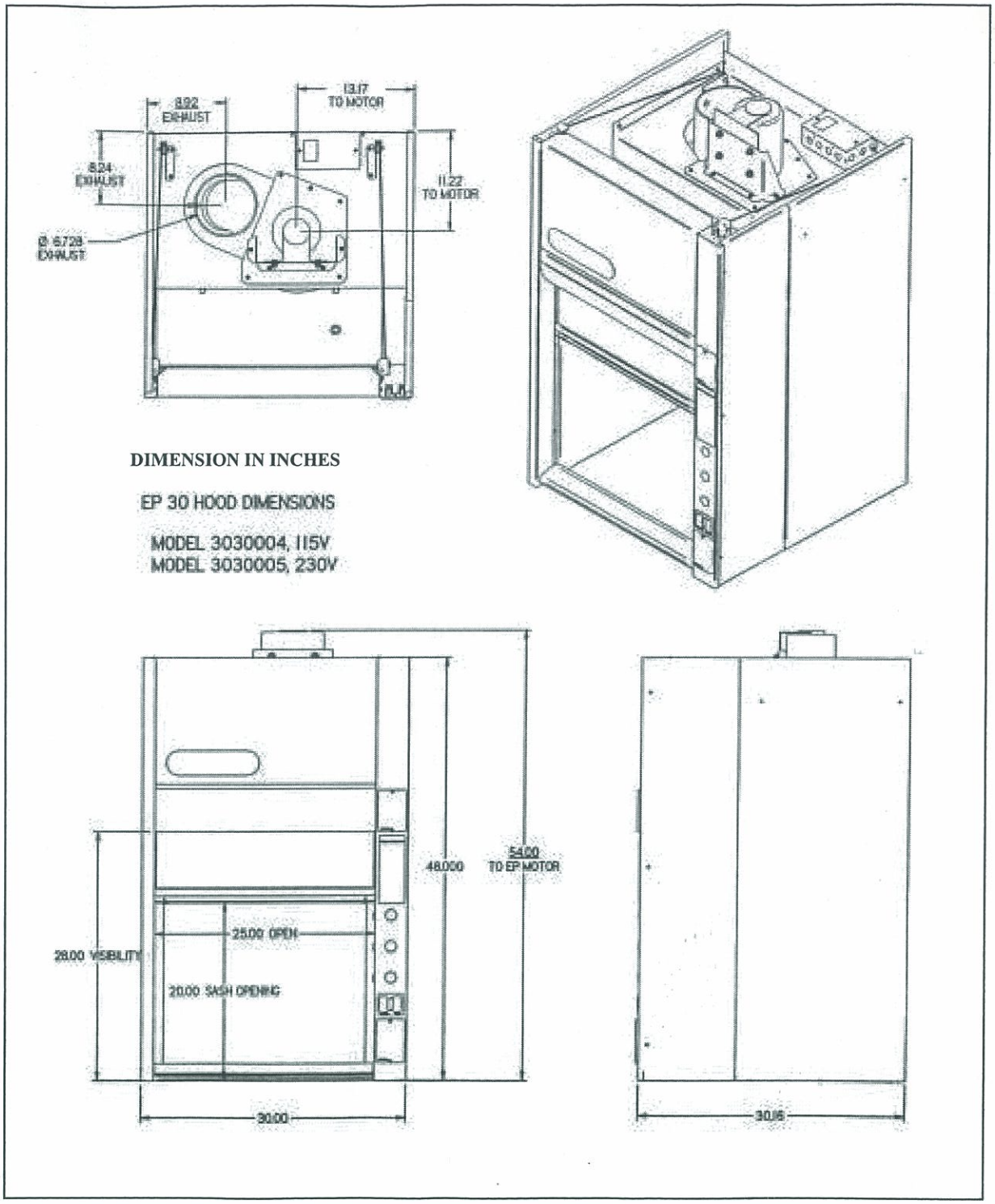
8.92
EXHAUST
13.17
TO MOTOR
8.24
EXHAUST
11.22
TO MOTOR
Ø 6.728
EXHAUST
DIMENSION IN INCHES
EP 30 HOOD DIMENSIONS
MODEL 3030004, 115V
MODEL 3030005, 230V
48.000
54.00
TO EP MOTOR
25.00 OPEN
28.00 VISIBILITY
20.00 SASH OPENING
30.00
30.05

Figure B-4

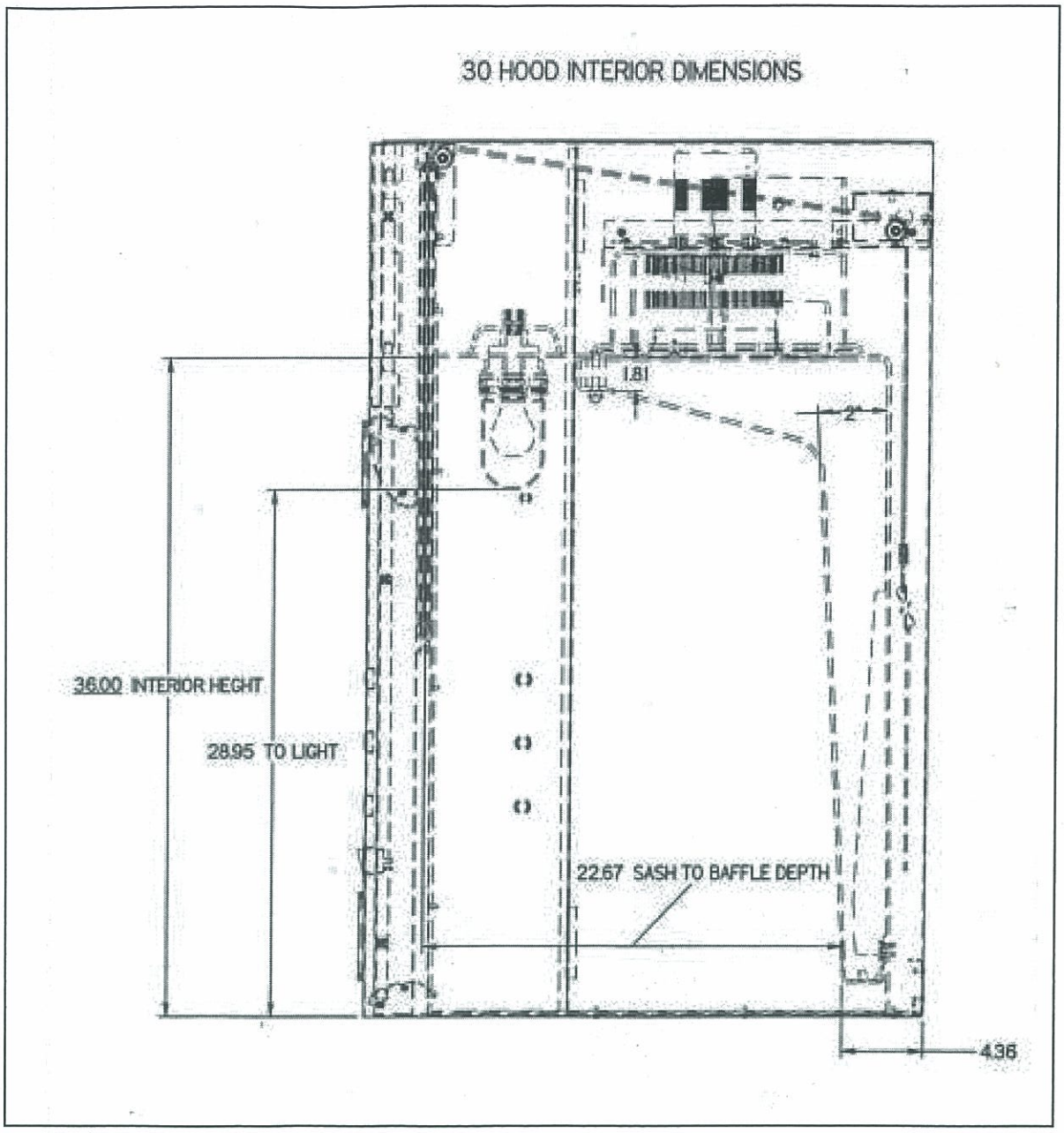
30 HOOD INTERIOR DIMENSIONS
1.81
2"
36.00 INTERIOR HEGHT
28.95 TO LIGHT
22.67 SASH TO BAFFLE DEPTH
4.36

Figure B-5

Appendix C
Fiberglass 30 Fume Hood Specifications

Environmental Conditions

- Indoor use only.
- Maximum altitude: 6562 feet (2000 meters).
- Ambient temperature range: 41° to 104°F (5° to 40°C).
- Maximum relative humidity: 80% for temperatures up to 88°F (31°C), decreasing linearly to 50% relative humidity at 104°F (40°C).
- Main supply voltage fluctuations not to exceed ±10% of the nominal voltage.
- Transient over-voltages according to Installation Categories II (Over-voltage Categories per IEC 1010). Temporary voltage spikes on the AC input line that may be as high as 1500V for 115V models and 2500V for 230V models are allowed.
- Used in an environment of Pollution degrees 2 (i.e., where normally only non-conductive atmospheres are present). Occasionally, however, a temporary conductivity caused by condensation must be expected, in accordance with IEC 664.

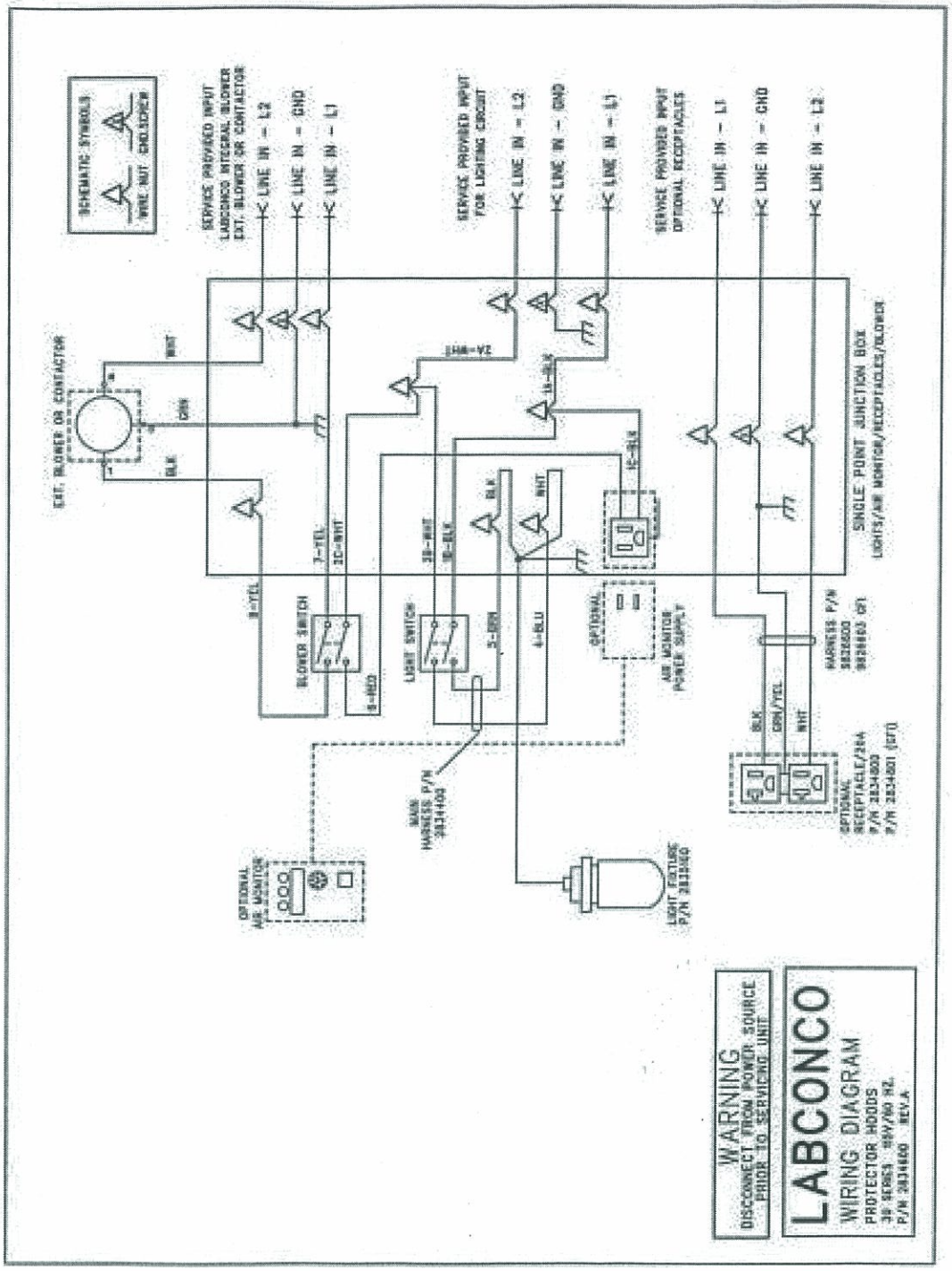
SCHEMATIC SYMBOLS
WIRE NUT
CHOKSCREW
EXT. BLOWER OR CONTACTOR
SERVICE PROVIDED INPUT
LABCONCO INTEGRAL BLOWER
EXT. BLOWER OR CONTACTOR
LINE IN - L2
LINE IN - GND
LINE IN - L1
SERVICE PROVIDED INPUT
FOR LIGHTING CIRCUIT
LINE IN - L2
LINE IN - GND
LINE IN - L1
SERVICE PROVIDED INPUT
OPTIONAL RECEPTACLES
LINE IN - L1
LINE IN - GND
LINE IN - L2
SINGLE POINT JUNCTION BOX
LIGHTS/AIR MONITOR/RECEPTACLES/BLOWER
WHT
GRN
BLK
BLOWER SWITCH
LIGHT SWITCH
OPTIONAL
AIR MONITOR POWER SUPPLY
MAIN HARNESS P/N 2834400
OPTIONAL AIR MONITOR
LIGHT FIXTURE P/N 2833960
OPTIONAL RECEPTACLE/24A
HARNESS P/N
WARNING
DISCONNECT FROM POWER SOURCE PRIOR TO SERVICING UNIT
LABCONCO
WIRING DIAGRAM
PROTECTOR HOODS
REV.A

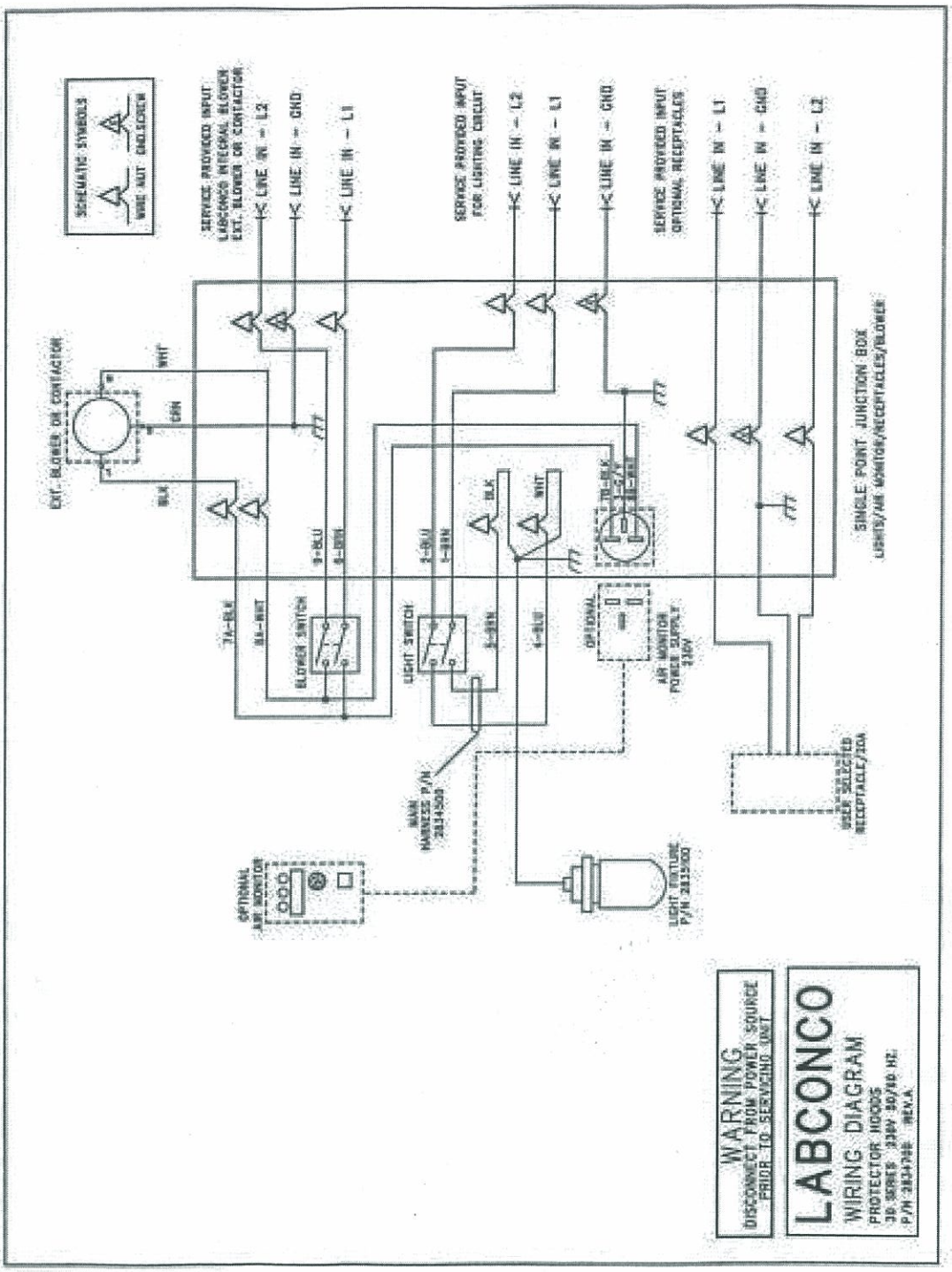
SCHEMATIC SYMBOLS
WIRE NUT
CAD SCREW
SERVICE PROVIDED INPUT
LABCONCO INTEGRAL BLOWER
EXT. BLOWER OR CONTACTOR
LINE IN - L2
LINE IN - GND
LINE IN - L1
SERVICE PROVIDED INPUT
FOR LIGHTING CIRCUIT
LINE IN - L2
LINE IN - L1
LINE IN - GND
SERVICE PROVIDED INPUT
OPTIONAL RECEPTACLES
LINE IN - L1
LINE IN - GND
LINE IN - L2
EXT. BLOWER OR CONTACTOR
WHT
GRN
BLK
SINGLE POINT JUNCTION BOX
LIGHTS/AIR MONITOR/RECEPTACLES/BLOWER
BLOWER SWITCH
LIGHT SWITCH
OPTIONAL
AIR MONITOR POWER SUPPLY 120V
MAIN HARNESS P/N 2334500
OPTIONAL AIR MONITOR
LIGHT FIXTURE P/N 2315900
USER SELECTED RECEPTACLE/20A
WARNING
DISCONNECT FROM POWER SOURCE PRIOR TO SERVICING UNIT
LABCONCO
WIRING DIAGRAM
PROTECTOR HOODS
30 SERIES 230V 50/60 HZ
P/N 2334300 REV.A

APPENDIX D
REFERENCES

Many excellent reference texts and booklets are currently available. The following is a brief listing:

Laboratory Ventilation Standards

Federal Register 29 CFR Part 1910
Non-mandatory recommendations from "Prudent Practices".

- Fume hoods should have a continuous monitoring device
- Face velocities should be between 60-100 linear feet per minute (lfpm)
- Average 2.5 linear feet of hood space per person

Occupational Health and Safety
U.S. Department of Labor
200 Constitution Avenue N.W.
Washington, DC 20210
(202) 523-1452

Industrial Ventilation-ACGIH

- Fume hood face velocities between 60-100 lfpm
- Maximum of 125 lfpm for radioisotope hoods
- Duct velocities of 1000-2000 fpm for vapors, gasses and smoke
- Stack discharge height 1.3-2.0 x building height
- Well designed fume hood containment loss, <0.10 ppm

Industrial Ventilation, A Manual of Recommended Practice.
24th Edition, 2001
American Conference of Governmental Industrial Hygienists
1330 Kemper Meadow drive
Cincinnati, OH 45240-1634
(513) 742-2020

ASHRAE 110-1995 Method of Testing Performance of Fume Hoods

Evaluates fume hood's containment characteristics

- Three part test: Smoke generation, Face velocity profile, Tracer gas release @ 4 liters per minute
- Rated As Manufactured (AM), As Installed (AI) and As Used (AU)

American Society of Heating, Refrigerating, and Air Conditioning Engineers
1791 Tullie Circle N.E.
Atlanta, GA 30329
(404) 636-8400

ANSI Z9.5-1993 Laboratory Standard

Covers entire laboratory ventilation system.

- Vertical stack discharge @ 2000-3000 fpm
- New and remodeled hoods shall have a monitoring device
- Ductless hoods should only be used with non-hazardous materials
- Fume hood face velocities between 80-120 fpm

American Industrial Hygiene Association
2700 Prosperity Avenue, Suite 250
Fairfax, VA 22031
(703) 849-8888

SEFA 1-2002

- Fume hood face velocities based on toxicity levels of chemicals
  Class A – 125 to 150 fpm
  Class B – 80 to100 fpm
  Class C – 75-to 80 fpm
- Test method – face velocity profile and smoke generation

Scientific Equipment & Furniture Association
1028 Duchess Drive
McLean, VA 22102
(703) 538-6007

NFPA 45 – 2002 Fire Protection for Laboratories Using Chemicals

- Laboratory hoods should not be relied on for explosion protection
- Exhaust air from fume hoods should not be recirculated
- Services should be external to the hood
- Canopy hoods only for non-hazardous applications
- Materials of construction should have flame spread of 25 or less
- 80 to 120 fpm to prevent escape

NFPA 30 – 2000 Flammable and Combustible Liquids Code

- Approved cabinets may be metal or wood
- Vent location on cabinets are required
- Venting of cabinets not a requirement

National Fire Protection Association
1 Batterymarch Park
P.O. Box 9101
Quincy, MA 02269-9101
(800) 344-3555

General References

American Conference of Governmental Industrial Hygienists. *Industrial Ventilation, A Manual of Recommended Practice,* Cincinnati, OH.

ASHRAE Standard Committee. *ASHRAE Standard* Atlanta: ASHRAE Publications Sales Department, 1995

British Standards Institution, *Laboratory Fume Cupboards*. Parts 1, 2 and 3, London: 1990

Department of Labor, Occupational Safety and Health Administration, *29 CFR Part 1910, Occupational Exposures to Hazardous Chemicals in Laboratories, Final Rule*. Vol. 55, No. 21. Washington D.C.:1990

DiBerardinis. L. et al. *Guides for Laboratory Design, Health and Safety Considerations*. Wiley & Sons, 1987

McDermott, Henry, *Handbook of Ventilation for Contaminant Control, 2nd Edition*. Butterworth Publishers, 1985.

Miller, Brinton M. et al. *Laboratory Safety: Principles and Practices.* American Society for Microbiology, Washington, D.C.: 1986

NIH Guidelines for the Laboratory Use of Chemical Carcinogens. NIH Publication No. 81-2385.

Rayburn, Stephen R. *The Foundation of Laboratory Safety, A Guide for the Biomedical Laboratory*. Springer-Verlag, New York: 1990

Sax, N. Irving and Lewis, JR., Richard J. *Rapid Guide to Hazardous Chemicals in the Workplace*. Van Nostrand Reinhold, 1987.

Schilt, Alfred A. *Perchloric Acid and Perchlorates*. The G. Frederick Smith Chemical Company, Columbus, OH: 1979.

Steere, Norman. *CRC Handbook of Laboratory Safety, 2nd Edition*. CRC Press, 1971.

DECLARATION OF CONFORMITY

Application Council Directive(s): 73/23/EEC, 89/336/EEC

Standard(s) to which conformity is declared: EN61010, EN55022, EN50082-1

Manufacturer's Name: Labconco Corporation

Manufacturer's Address: 8811 Prospect Avenue
Kansas City, MO 64132 USA

Importer's Name: See Shipping/Customs Documents*

Importer's Address: See Shipping/Customs Documents for your equipment

Type of Equipment: Laboratory Equipment- Fume Hoods/Cabinets

Model No: Fiberglass 30 Fume Hood:

3030000 Fiberglass 30 Laboratory Hoods
3030001 Fiberglass 30 Laboratory Hoods
3030002 Fiberglass 30 Laboratory Hoods
3030003 Fiberglass 30 Laboratory Hoods
3030004 Fiberglass 30 Laboratory Hoods
3030005 Fiberglass 30 Laboratory Hoods

Serial No.: Various – See Individual Declaration

Year of Manufacture: 2003 and subsequent

I, the undersigned, hereby declare that the equipment specified above conforms to the above Directive(s) and Standard(s).

See individual Declaration of Conformity which will be signed by the importer for your country.

Place: _____
(Signature)

Date: _____
(Full Name)

_____
(Position)

*An individual version of this declaration is included with your shipping/customs documentation.

Labconco P/N 36960-39 REV. – ECO B699

PRODUCT REGISTRATION CARD

Register Online! Go to www.labconco.com/productreg.html

By registering your product, you will receive these important benefits: • Warranty Confirmation • Product Registration • Product Protection • Free LabbyWear™ Merchandise

NAME _____ TITLE _____

DEPARTMENT _____ INSTITUTION _____

ADDRESS _____

CITY/STATE/ZIP/COUNTRY _____

TELEPHONE _____ EXT ____ FAX _____ E-MAIL _____

Which of the following comes closest to describing the type of activity in which you are engaged?

- ❑ Quality Control
- ❑ Clinical/Diagnostic
- ❑ Teaching/Instructional
- ❑ Research & Development
- ❑ Testing
- ❑ Production
- ❑ Other (please specify) _____

Of what type organization is your work a part?

- ❑ Industrial, Manufacturing, Utility
- ❑ Educational Institution (except Medical School)
- ❑ Medical, Medical School, Hospital, Public Health
- ❑ Government (except Medical)
- ❑ Independent, Foundation, Consulting
- ❑ Other (please specify) _____

Which comes closest to describing your scientific discipline?

- ❑ Biological Science
- ❑ Bio-Chemistry
- ❑ Polymer Chemistry
- ❑ Organic Chemistry
- ❑ Inorganic Chemistry
- ❑ Analytical Chemistry/R & D
- ❑ Analytical Chemistry/Quality Control
- ❑ Physical Chemistry
- ❑ Engineering or Physics
- ❑ Other (please specify) _____

Which Fiberglass 30 Laboratory Hood did you purchase?

Model Number* _____ **Serial Number*** _____ **Date of Installation** _____

**Model and serial numbers are located on the lower right-hand corner of the sash and the left-hand corner cover behind the front panel.*

Indicate Labconco accessories purchased with your Fiberglass 30 Hood.

- ❑ Acid Storage Cabinet
- ❑ Universal Base Stand
- ❑ Solvent (flammable) Storage Cabinet
- ❑ Work Surface
- ❑ Standard Base Cabinet
- ❑ Other _____

How did you learn about the Fiberglass 30 Hoods?

- ❑ Dealer Sales Rep
- ❑ Labconco Sales Rep
- ❑ Other (please specify) _____
- ❑ Dealer Catalog
- ❑ Labconco Literature
- ❑ Colleague
- ❑ Trade Show
- ❑ Advertisement
- ❑ Internet/WWW

What factors most influenced your decision to purchase a Fiberglass 30 Hood?

(Number up to 3, #1 being the most important)

- __ Appearance
- __ Ease of Operation
- __ Availability
- __ Reputation
- __ Safety Features
- __ Colleague Recommendation
- __ Service Program
- __ Price
- __ Other (please specify) _____
- __ Performance Specifications
- __ Dealer Recommendation

From whom did you purchase your Fiberglass 30 Hood? _____
(DEALER)

Please fold card over, tape edges and mail. No postage is required.

FIBERGLASS 30 LABORATORY HOODS

Protecting your laboratory environment

LABCONCO.

800-821-5525 or 816-333-8811
Fax 816-363-0130

REV 1/03

LabbyWear™ is the official uniform of LABsters everywhere! Be a LABster!

Labby
The LABster

As a token of our thanks for returning your Product Registration Card, we would like to send you the LabbyWear of your choice. Please select from one of the three items listed or collect Labby Bucks and redeem for other LabbyWear merchandise. Then just complete the information requested on the reverse side, fold, tape edges and mail.

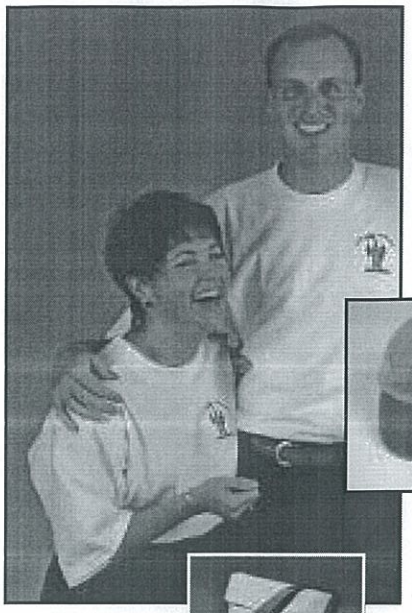

- ❑ **T-shirt.** 100% cotton, short-sleeved, white, with Labby The LABster embroidered on the front left side. Specify unisex size.
  - ❑ Large ❑ XLarge
- ❑ **Twill cap.** Pigment-dyed, two-color, with six panels and Labby The LABster embroidered on the front.
- ❑ **Lunch bag.** Insulated, teal with royal blue accent and Labby The LABster embroidered on the front.
- ❑ **10 Labby Bucks** and LabbyWear Catalog.

NO POSTAGE
NECESSARY
IF MAILED
IN THE
UNITED STATES

BUSINESS REPLY MAIL

FIRST-CLASS MAIL PERMIT NO 1166 KANSAS CITY MO

POSTAGE WILL BE PAID BY ADDRESSEE

LABCONCO.

LABCONCO CORPORATION
8811 PROSPECT AVENUE
KANSAS CITY MO 64132-9971

INSTALLATION & OPERATIONS MANUAL

Including Service and Warranty
Incluidos mantenimiento y la garantía
Avec service et garantie

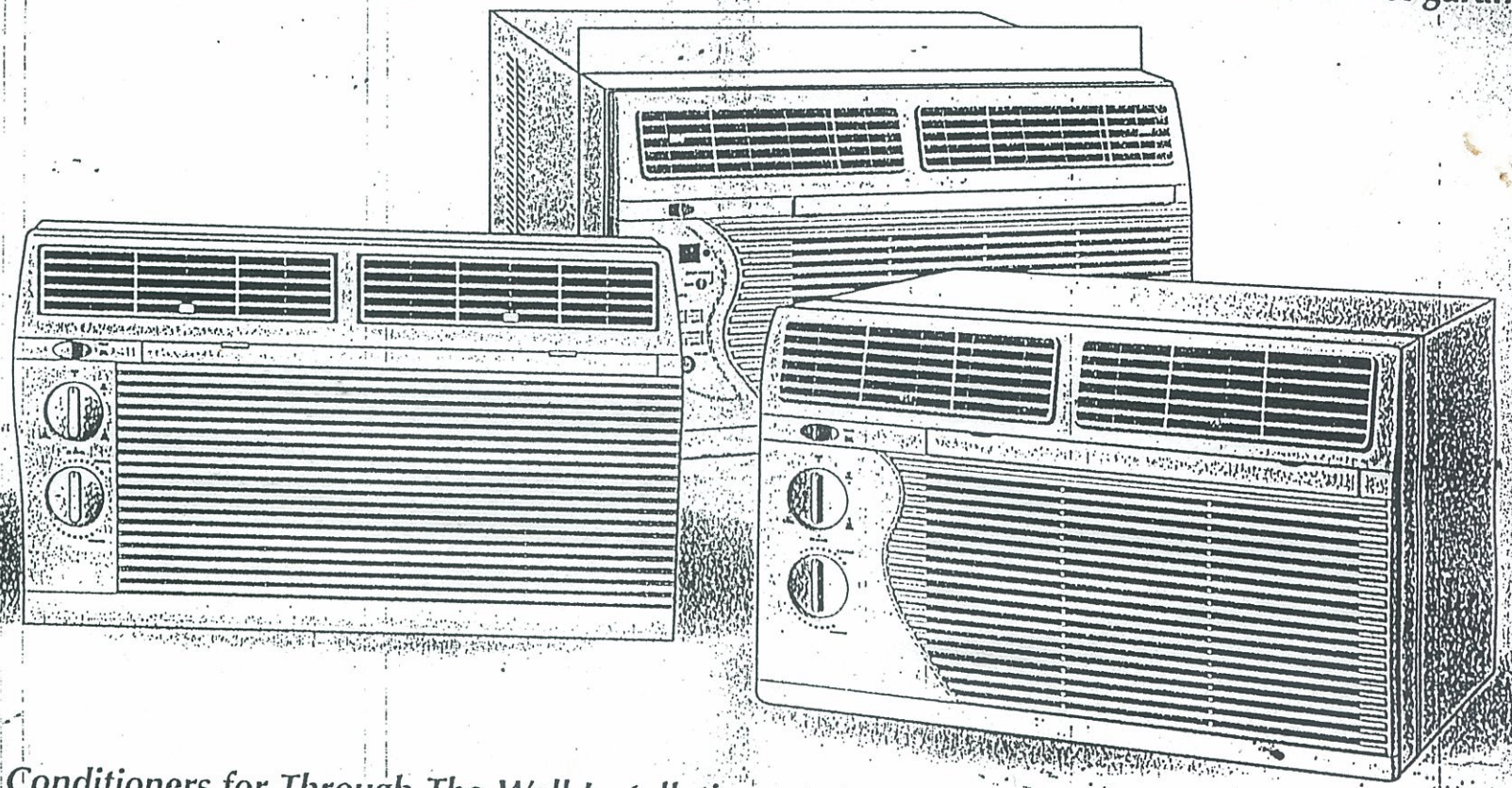

Room Air Conditioners for Through-The-Wall Installation
Acondicionadores de aire para instalación atravesando la pared
Climatiseur d'air individuel pour installation murale dans une gaine

CONTENTS

ENGLISH

Electrical Requirements.....1
Warning
Notice
Important Grounding Requirements

Installation.....1
Installation
Tools Needed
If You Purchase a New Sleeve
Installation in Existing Wall Sleeve

Operation.....5
Control Functions
Cooling Operation
Heating Operation (Heating Models Only)
Air Circulation Without Cooling or Heating
Exhaust Operation Without Cooling or Heating
Directing Airflow
Cleaning Air Filter

Service.....8
Insufficient Cooling
Insufficient Heating (Heating Models Only)
Unit Fails to Start
Service or Parts Required

Warranty.....8

ESPAÑOL

Requistos para la eléctricos.....10
Aviso
Aviso
Requistos importantes para la conexión a tierra

Instalación.....10
Instalación
Herramientas necesarias
Si compra una camisa nueva
Instalación en una manga de pared existente

Funcionamiento.....14
Funciones de control
Operación de enfriamiento
Funcionamiento de la calefacción
(Solamente en modelos con calefacción)
Circulación de aire sin enfriamiento o calefacción
Funcionamento del escape sin enfriamiento
o calefacción
Orientación del flujo de aire
Limpieza del filtro de aire

Servicio.....18
Enfriamiento insuficiente
Calefacción insuficiente
(Modelos con calefacción solamente)
Si la unidad no se enciende
Necesidad de servicio o piezas

Garantía.....18

FRANÇAIS

Exigences électrique.....20
Avertissement
Avis
Importantes exigences de mise à la terre

Montage.....20
Installation
Outils nécessaires
Si vous achetez un nouveau manchon
Installation dans un manchon mural existant

Fonctionnement.....24
Commandes
Fonctionnement du climatiseur
Fonctionnement du chauffage
(Modèles chauffants uniquement)
Circulation d'air sans refroidissement ou chauffage
Fonctionnement de l'évacuation d'air
sans refroidissement ou chauffage
Direction du flux d'air
Nettoyage du filtre à air

Service.....28
Refroidissement insuffisant
Chauffage insuffisant (Modèles chauffants seulement)
L'appareil ne se met pas en marche
Réparations ou pièces s'avèrent nécessaires

Garantie.....28

INSTALLATION

⚠ WARNING

Electrical Shock Hazard

1. Plug unit only into grounded electrical outlet.
2. Do not use an extension cord or plug adaptor with this unit.
3. Do not operate unit with front removed.

Failure to follow the above precautions could result in electrical shock, fire or personal injury.

If the air conditioner has a serial plate rating of 115 volts and greater than 7.5 amps it must have its own fuse or circuit breaker, and no other device or unit should be operated on that fuse or circuit breaker.

If the air conditioner has a serial plate rating of 230 volts it must have its own fuse or circuit breaker, and no other device or unit should be operated on that fuse or circuit breaker.

The location of the serial plate that applies to this model can be found on the back page of this manual.

Notice

Do not operate this air conditioner without proper time delay circuit protection. Refer to serial plate for proper power supply requirements.

RECOMMENDED CIRCUIT WIRE SIZES
(As installed per building code)

PROTECTOR SIZE	*WIRE GAUGE*
15 AMP	#14 MINIMUM
20 AMP	#12 MINIMUM
30 AMP	#10 MINIMUM

115V 15A | *230V 15A* | *230V 20A* | *230V 30A*

⚠ WARNING

Product Damage:
Do not cut, alter or remove any of the expanded polystyrene (white foam) inside this air conditioner.

For Your Safety:
Do not store or use gasoline or other flammable vapors and liquids in the vicinity of this or any other appliance. The fumes can create a fire hazard or explosion.

Installation

This air conditioner has been designed for installation through the wall, in a sleeve.

Note: For performance reasons, we strongly recommend using wall sleeve A7005XX. This thru-the-wall sleeve can be purchased from your dealer.

Tools Needed

- *Blade-type screwdriver*

1. ELECTRICAL REQUIREMENTS

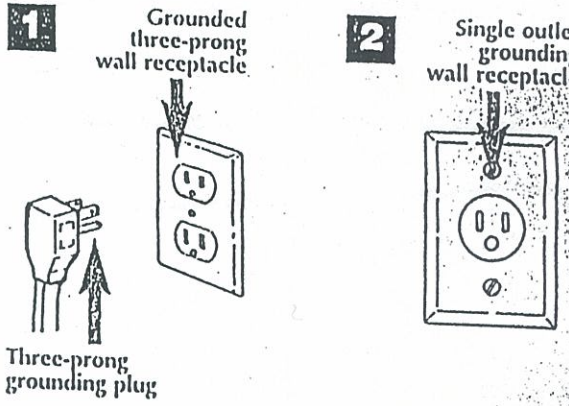

Important Grounding Requirements

1. Air conditioner has a three-prong grounding plug on power supply cord, which must be plugged into properly grounded three-prong wall receptacle for your protection against possible shock hazard. For models up to and including 7.5 amperes use grounding type wall receptacle to match cord plug *(Fig. 1)*.
2. For models above 7.5 amperes use single outlet grounding type wall receptacle to match cord plug *(Fig. 2)*.

Caution: We recommend that a qualified electrician install unit in accordance with the National Electrical Code and local codes and ordinances.
Caution: Use copper conductors only.

INSTALLATION

2. SLEEVE INSTALLATION

If You Purchase a New Sleeve

1. Remove front and back cover. Save for future use when air conditioner is removed *(Fig. 3)*.
2. Remove the exterior rear grille from the sleeve.
3. Brush out all debris from inside of sleeve, make sure inside is clean and that the drain holes are completely clear.
4. Back out screws in exterior grille approximately 1/8". Tip exterior grille while holding on to the wire loop and pass it through the exterior opening of the sleeve *(Fig. 5)*.
5. The baffle contact area should be at the left. Align grille to engage screw heads through keyhole slots in the outer flanges of sleeve. Push downward until screws are positioned into bottom of keyhole slots. Tighten the four (4) screws, unwind and discard the wire loop *(Fig. 6)*.
6. Unpack air conditioner - see instructions on the carton. Depending on the model, your air conditioner may weigh as much as 95 pounds. To insure safe handling, obtain the necessary help to lift and position the unit during installation and removal.
7. Slide air conditioner fully into the sleeve. It should be centered in the sleeve so that all seals bear evenly to prevent air leakage *(Fig. 7)*. *NOTE: THE UNIT IS 3" DEEPER THAN THE SLEEVE. THE UNIT WILL PROTRUDE 3" FROM THE SLEEVE INTO THE ROOM.*
8. Assemble trim frame by lying all four pieces face down on a flat surface and snapping them securely together *(Fig. 8)*.
9. Install the insulating foam in the recess of the trim frame. Install the 1/4" insulating foam around the inside circumference of the trim frame. Begin in the bottom left corner and run foam around the entire circumference of the trim frame. Make sure to keep foam flush with the bottom edge of the trim frame *(Fig. 9)*.
10. Slide the trim frame onto the unit until the foam makes a seal with the wall sleeve *(Fig. 10)*.

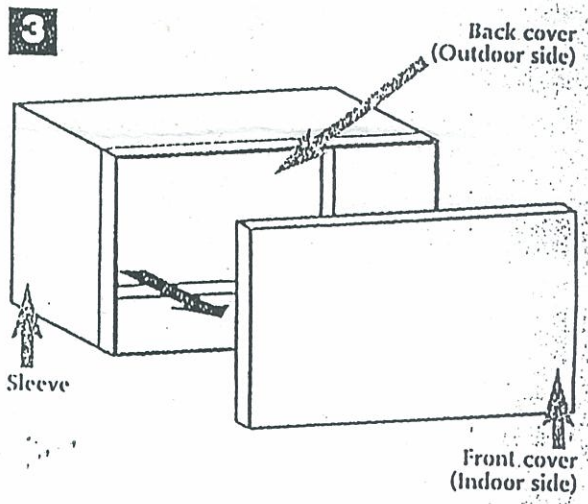

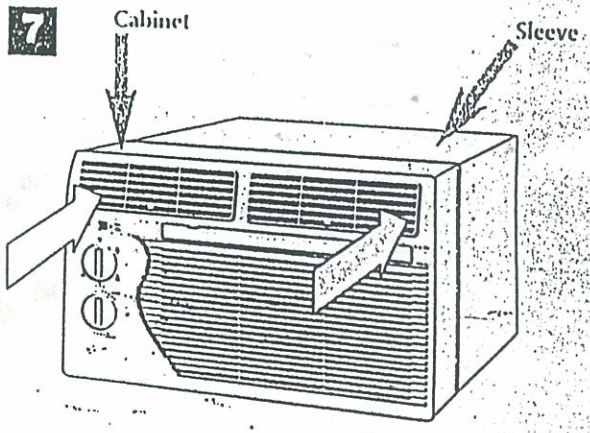

4

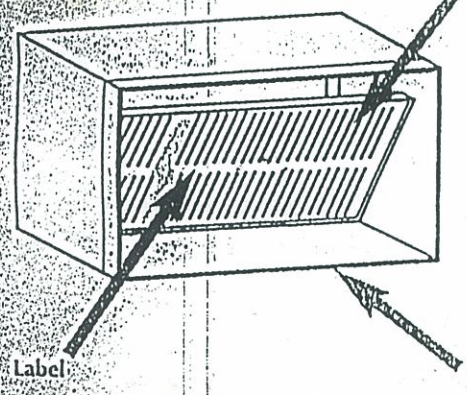
Rear grille
Label
Indoor side

5

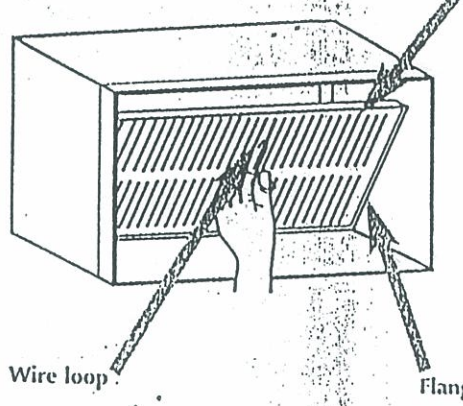
New grille
Wire loop
Flange to inside

6

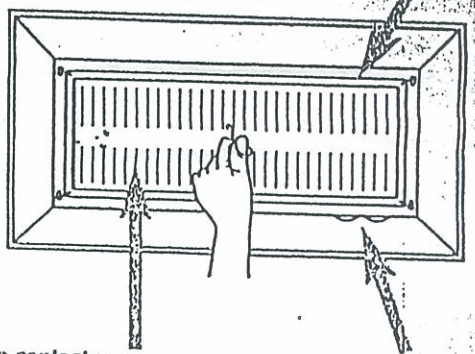
New grille
Baffle contact area
Drain holes

8

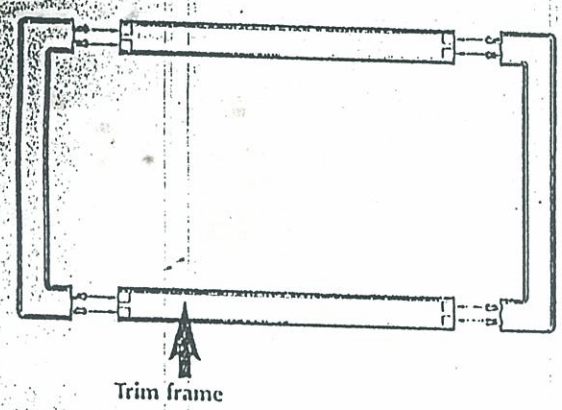
Trim frame

9

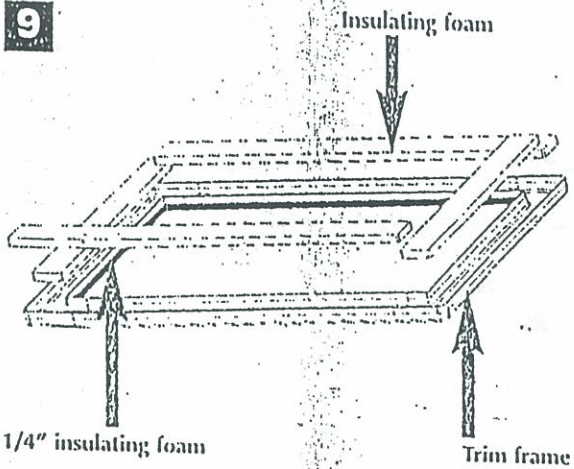
Insulating foam
1/4" insulating foam
Trim frame

10

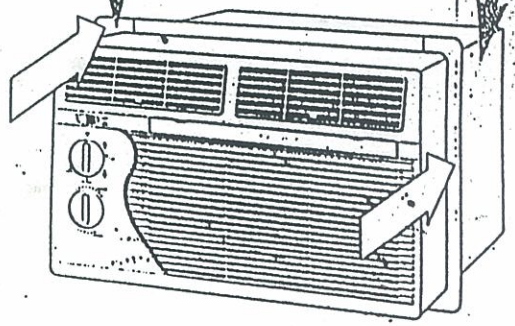
Trim frame
Cabinet

INSTALLATION

2. SLEEVE INSTALLATION

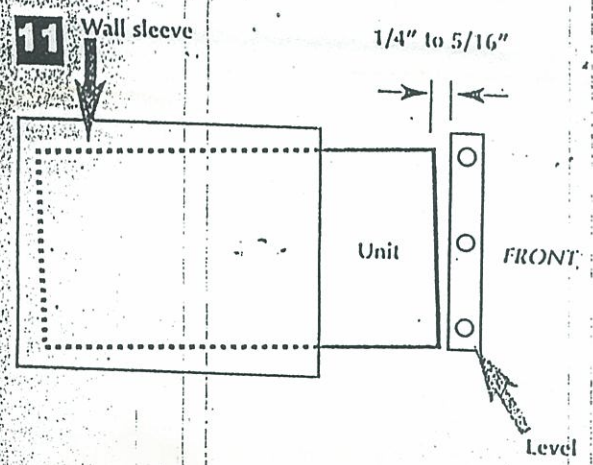

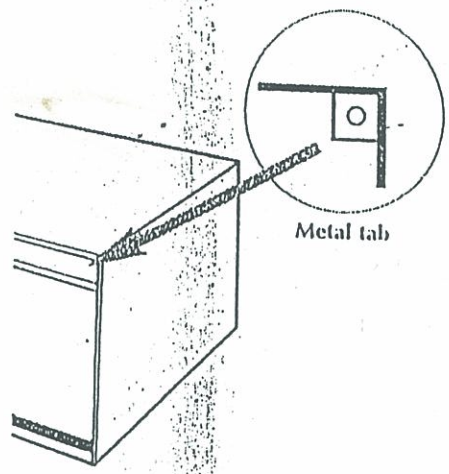

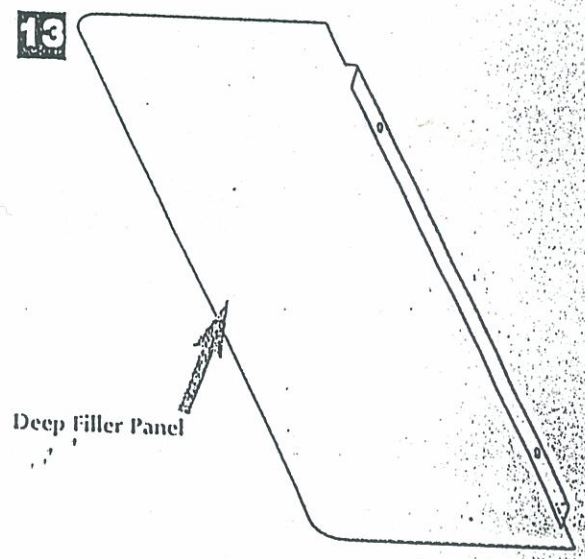

CAUTION: When installation is complete, the unit must have a rearward slope (Fig. 11).

Installation in Existing Wall Sleeve

1. Remove all debris from interior of wall sleeve. It may also be necessary to remove existing foam.
2. Break out metal tabs if the sleeve is so equipped *(Fig. 12)*.
3. Measure the wall sleeve depth. If the sleeve is more than 18" deep, remove the condenser baffle making sure to retain the two screws. Using the two screws from the condenser baffle, attach the Deep Filler Panel *(Fig. 13)* in place of the baffle.
4. Slide the unit into the sleeve until the condenser baffle (Deep Filler Panel if installed) makes contact with the exterior grille.
5. *See items 8 through 11 of preceeding instructions to complete installation.*

OPERATION

3. CONTROL PANEL

One of the pictured control panels is similar to your panel.

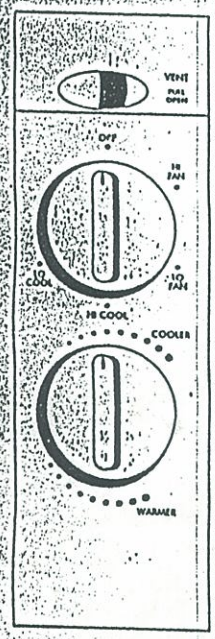

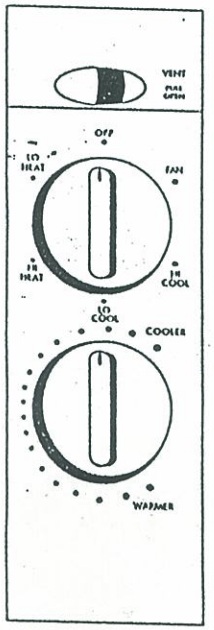

Caution: If air conditioner is shut off, wait a minimum of three minutes before restarting.

The heat from this unit is designed only as a supplemental heat source in addition to regular heating systems.

Control Functions

1. **Vent:** Circulates fresh air and helps remove stale air when in the open position. Maximum air circulation and cooling occur when in the closed position.
2. **Master Control:** Turns unit on and off. Selects desired function of unit, cooling, fan, or heating (on some models).
3. **Thermostat:** Controls the unit thermostat, which regulates room temperature by automatically turning compressor or heating element (on some models) on and off.

Cooling Operation

1. Close Vent.
2. Turn Thermostat to "Cooler".
3. Turn Master Control to HI COOL.
4. If room becomes too cool for comfort, turn the Thermostat counterclockwise until the compressor turns off (the fan will remain in operation).
5. When the desired comfort level is reached, the Master Control may be turned to the LO COOL setting.
6. To turn the unit off, or in event of a power interruption, turn the Master Control to OFF.

Heating Operation - Heating Models Only

1. Close Vent.
2. Turn Thermostat to "Warmer".
3. Turn Master Control to HI HEAT.
4. If room becomes too warm for comfort, turn the Thermostat clockwise until the heating elements turn off (air circulating fan will remain in operation). The temperature will be automatically maintained. Further adjustment of Thermostat may be needed to reach desired comfort level.
5. When the desired comfort level is reached, the Master Control may be turned to LO HEAT.
6. To turn unit off, or in event of power interruption, turn Master Control to OFF.

Air Circulation Without Cooling or Heating

To circulate and filter the air, proceed as follows:

1. Close Vent.
2. Turn Master Control to HI FAN.

Exhaust Operation Without Cooling or Heating

To exhaust stale air, proceed as follows:

1. Open Vent.
2. Turn Master Control to HI FAN.

OPERATION

4. ELECTRONIC CONTROL PANEL

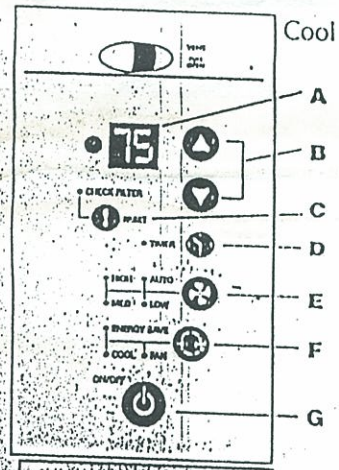

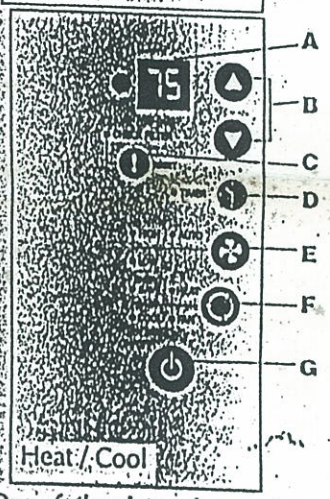

One of the pictured control panels is similar to your panel.

A. Set Temperature /Timer Display

B. Temperature /Timer Hour Controls

C. Check Filter Light/Reset

D. Timer Control

E. Fan Speed Control

F. Mode Control

G. Power Control

Power Control

The Power Control turns the unit on and off.

Set Temperature/ Timer Display

Shows the set temperature when the unit is in operation and hours when the timer is being set. *THE TEMPERATURE DISPLAY ONLY SHOWS THE SET TEMPERATURE, NOT THE ACTUAL ROOM TEMPERATURE.*

Temperature/ Timer Hour Controls

These buttons are used to raise or lower the set temperature in increments of 1° from 66°F to 88°F. By depressing both buttons at once, the display will toggle between Celsius and Fahrenheit. When the timer is being set, these buttons are used to change the hour setting in increments of 1 from 00 to 24.

Check Filter Light/Reset

After 250 hours of usage the Check Filter light will turn on. At this time, the filter needs to be removed and cleaned (see page 9). After the filter is cleaned and repositioned, depress the Reset button. This will restart the counter and turn the light off.

Mode Control

A green light will indicate which mode is currently being utilized.

Cool Mode – The unit will circulate and cool the air.

Heat Mode (Heat Models Only)– The unit will circulate and heat the air.

Heater Safety Feature- When heater is powered off, low fan will automatically stay on and run for 60 seconds to ensure the removal of residual heat, meanwhile, the Low Fan LED blinks until the low fan stops.

Fan Mode – The unit will only circulate the air.

Energy Saver Mode –
(The energy saver mode is designed to operate with Cool mode only)
The fan will switch from the set fan speed to LO whenever the compressor turns off in response to the thermostat. When the compressor cycles back on, the unit will return to the original fan setting.

Fan Speed Control

High, Medium*, Low and Auto

The settings are adjusted with the Fan Speed Control, each time the button is depressed it changes the setting. A green light will indicate which setting is currently being used.
When the AUTO feature is selected while the air conditioner is in the COOL or HEAT mode, the fan speeds will change automatically as the temperature in the room changes.
COOL Mode

- *7° or more above the set temperature will use HI FAN.*
- *4° or less above the set temperature will use LO FAN.*

HEAT Mode

- *9° or more below the set temperature will use HI FAN.*
- *4° or less below the set temperature will use LO FAN.*

*MEDIUM FAN NOT available on HEAT models.

Timer Control

The timer can be set to either turn the unit on or off.

To turn the unit on using the Timer:
Depress the timer key when the power is off, the display will read 00. Adjust to the desired number of hours before TURN ON using the up/down arrows.

- The display will show the time by hours left until TURN ON.
- To Turn the timer off, depress the timer key.
- A green light next to the Timer Control indicates that the timer is set.

To turn the unit OFF using the Timer:
Depress the timer key when the power is on, the display will read 00. Adjust to the desired number of hours before TURN OFF using the up/down arrows. The display will automatically go back to the set temperature after 10 seconds.

- To display the amount of time left until TURN OFF, depress the timer button once.
- To turn the TIMER OFF, depress the timer button twice.
- A green light next to the Timer Control indicates that the timer is set.

Built-in three minute timing delay.

This electronic controlled unit will not automatically resume operation after a power failure.

If this electronic unit will not respond to touch pad or remote control commands, it is necessary to unplug the unit from the electrical outlet for five seconds and then plug the unit back in.

Caution:

Do not block air circulation to outside louvers of cabinet.

Do not block air flow inside with blinds, curtains, or furniture, or outside with shrubs, enclosures, or other buildings.

Do not run air conditioner with outside protective cover in place. This could result in mechanical damage within the air conditioner.

4. FRONT PANEL

14 Adjustable louvers

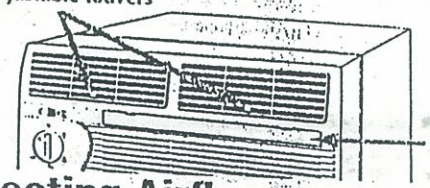

Air filter

Directing Airflow

Unit is engineered with adjustable louvers to direct discharge airflow. Louvers are manually adjusted by moving levers in direction of desired airflow *(Fig. 10)*.

Cleaning Air Filter

MECHANICAL CONTROL PANEL: Clean the filter every two weeks

1. Turn Master Control to OFF.
2. Remove the air filter by grasping the top corners and pulling it up and out of the unit *(Fig. 10)*.
3. Wash in hot soapy water, rinse and shake dry.
4. Replace the filter, with the front of the filter toward you.
5. To dry the filter thoroughly, run your unit for a few minutes. Remember, only a clean filter works properly and delivers top efficiency at every setting.

ELECTRONIC CONTROL PANEL:

1. After 250 hours of usage the Check Filter light will turn on.
2. Remove the air filter by grasping the top corners and pulling it up and out of the unit *(Fig. 10)*.
3. Wash in hot soapy water, rinse and shake dry.
4. Replace the filter, with the front of the filter toward you.
5. After the filter is cleaned and repositioned, depress the Reset button. This will restart the counter and turn the light off.

Note: Failure to keep air filter clean will result in poor air circulation. DO NOT operate without filter. This can render the unit inoperative.
Proper use and care of your air conditioner will help ensure longer life of the unit. It is recommended to annually inspect and clean the coils and condensate water passages. Expense of annual inspection is the consumers' responsibility.

SERVICE & ROOM AIR CONDITIONER WARRANTY

Service

To save time and expense, check the following before calling an authorized service station.

Insufficient Cooling

- Turn Master Control to OFF.
- Shut all windows and doors in room.
- Remove any obstructions from inside and outside cabinet louvers.
- Close Air Exchanger.
- Inspect filter and clean if dirty.
- Turn Thermostat to Cooler and Master Control to HI COOL.

Under certain conditions the cooling coils directly behind the filter, may ice up and block the airflow. This is a common occurrence in air conditioners caused when the outside temperature drops below 70°F (21°C) while the humidity remains high. If this happens, simply turn the unit off and allow the ice to melt, then resume normal operation.

Insufficient Heating-Heating Models Only

- Turn Master Control to OFF.
- Shut all windows and doors in room.
- Remove any obstructions from inside and outside cabinet louvers.
- Close Vent.
- Turn Thermostat to Warmer and Master Control to HI HEAT.

Unit Fails to Start

- Turn Master Control to OFF.
- Replug line cord plug into outlet to be sure electrical contact is being made. (If firm contact is not being made, outlet may have to be replaced).
- Turn Master Control to FAN. If air circulating fan does not operate, check house circuit breaker (or fuses).

For Models Installed in North America - If Service or Parts are Required

First, make the recommended checks. If it appears that service or parts are still required, see your room air conditioner warranty "How to Obtain Warranty Service or Parts".

For Models Installed Outside North America

For room air conditioners purchased for use outside North America, the manufacturer does not extend any warranty either expressed or implied. Consult your local dealer for any warranty terms extended by the importer in your country.

Room Air Conditioner Warranty

(Within the 48 contiguous United States, state of Hawaii, the District of Columbia, Puerto Rico and Canada)

Full (One Year) Parts and Labor Warranty

During the first year after the date of original purchase, Fedders Appliances will, through its authorized servicers and free of charge to the owner or any subsequent user, repair or replace any parts which are defective in material or workmanship due to normal use. Ready access to the air conditioner for service is the responsibility of the owner.

Limited (Five Year) Sealed System/ (Two Year) Fan Motor Parts Warranty

In addition to the full (one year) parts and labor warranty described above, Fedders Appliances will, through its authorized servicers or parts distributors, exchange sealed system parts (consisting of compressor, evaporator, condenser, and interconnecting tubing) during the second year through fifth year, and the fan motor during the second year, both from the original date of purchase, providing the parts are defective in material or workmanship. Transportation, handling, or labor costs to diagnose, repair, or replace such defective parts are not covered by this limited parts warranty and are the owner's responsibility.

Note: In the event of any required parts replacement within the period of this warranty, Fedders Appliances replacement parts shall be used and will be warranted only for the period remaining on the original warranty.

Exceptions

The above warranty does not cover failure to function caused by damage to the unit while in your possession (other than damage caused by defect or malfunction); or by its improper installation; or by unreasonable use of the unit, including without limitation, failure to provide reasonable and necessary maintenance or to follow the written Installation and Operating Instructions. If the unit is put to commercial, business, rental, or other use or application other than for consumer use, we make no warranties, express or implied, including, but not limited to, any implied warranty of merchantability or fitness for particular use or purpose.

THE REMEDIES PROVIDED FOR IN THE ABOVE EXPRESS WARRANTY ARE THE SOLE AND EXCLUSIVE REMEDIES THEREFOR, NO OTHER EXPRESS WARRANTIES ARE MADE. ALL IMPLIED WARRANTIES, INCLUDING BUT NOT LIMITED TO ANY IMPLIED WARRANTY OF MERCHANTABILITY OR FITNESS FOR A PARTICULAR USE OR PURPOSE, ARE LIMITED IN DURATION TO ONE YEAR FROM THE DATE OF ORIGINAL PURCHASE. IN NO EVENT SHALL FEDDERS APPLIANCES BE LIABLE FOR INDIRECT, INCIDENTAL, OR CONSEQUENTIAL DAMAGES, EVEN IF ADVISED IN ADVANCE OF THE POSSIBILITY OF SUCH DAMAGES. NO WARRANTIES, EXPRESS OR IMPLIED, ARE MADE TO ANY BUYER UPON RESALE.

Some states do not allow limitations on how long an implied warranty lasts or do not allow the exclusion or limitation of incidental or consequential damages, so the above limitations or exclusions may not apply to you. This warranty gives you specific legal rights, and you may also have other rights which may vary from state to state.

No warranties are made for units sold outside of the above stated areas. Your distributor or final seller may provide a warranty on units sold outside of these areas.

How to Obtain Warranty Service or Parts

Service for your room air conditioner will be provided by CareCo, a division of the manufacturer with authorized independent servicers nationwide.

Note: Before calling for service, carefully read the Installation and Operating Instructions booklet. Then if you need service:

1. Call a CareCo authorized servicer and advise them of model number, serial number, date of purchase and nature of complaint. Service will be provided during normal working hours. Contact your dealer for the name of an authorized servicer, if unknown to you.
2. If your dealer is unable to give you the name of a servicer or if you need other assistance, call the following toll-free number for the name of an authorized servicer or authorized parts distributor:

   1-800-332-6658

   or you may write:

   CareCo, Service Department
   415 W. Wabash Ave., P.O. Box 200
   Effingham, IL 62401

Proof of Purchase Date

It is the responsibility of the consumer to establish the original purchase date for warranty purposes. We recommend that a bill of sale, cancelled check, or some other appropriate payment record be kept for that purpose.

FOR FUTURE REFERENCE

Write down the model and serial numbers

The model and serial numbers can be found on the left hand side of the cabinet. Use these numbers in any correspondence or service calls concerning your air conditioner.

Escriba los números del modelo y de la serie

El número de modelo y el número de serie se encuentran en el lado izquierdo del gabinete. Use estos números en cualquier correspondencia o llamada de servicio relacionada con su acondicionador de aire.

Inscrivez les numéros de modèle et de série

Les numéros de modèle et de série se trouvent sur le côté gauche du boîtier. Indiquez ces numéros dans toute correspondance concernant votre climatiseur ou lors de tout appel au service après-vente.

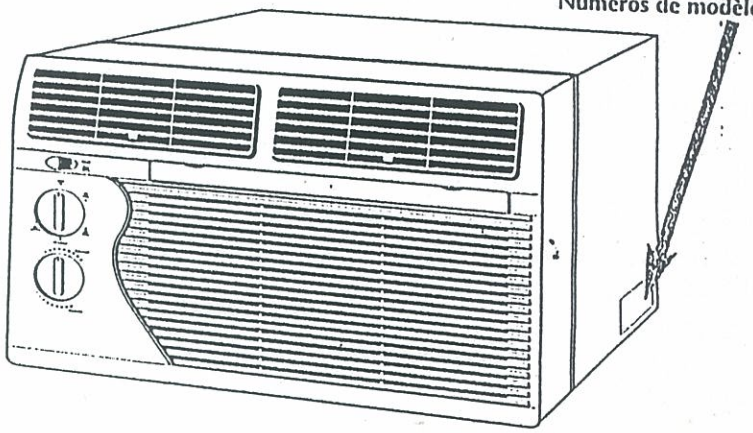

Model No., Modelo No., N° de modèle

Serial No., Número de serie, N° de série

Date of Purchase, Fecha de la compra, Date d'achat

Store Name Where Purchased, Nombre del negocio donde fue comprado, Nom du magasin où a été acheté l'appareil

Store Address, Localidad del negocio, Adresse du magasin

Store Phone, Teléfono, Téléphone

Features and specifications subject to change without notice.

Las características y especificaciones están sujetas a cambio sin previo aviso.

Les caractéristiques et spécifications sont sujettes à modifications sans préavis.

23-23-0275N-008

CMM 0010

200 SERIES

ELECTRICAL / PLUMBING SPECIFICATIONS

ELECTRICAL

A 115 volt, 60 Hz, 15 amp fused electrical supply is required. It is recommended that a separate circuit, serving only this appliance, be provided.

All Sub-Zero 200 Series units are equipped with a power supply cord with a 3-prong grounding plug and it must be plugged into a mating 3-prong grounding type wall receptacle. Follow the National Electrical Code and local codes and ordinances when installing the receptacle. Refer to illustration 1, for exact specifications.

PLUMBING

For Models 245 and 315, rough in the water supply line. Connect a 1/4-inch OD copper line to the house supply, being sure to use an easily accessible shut off valve between the supply and the refrigerator.

Do not use "self-piercing" valves. A saddle valve kit (part #4-20-088-0) is available from your distributor/dealer. A line filter is required when water conditions have a high sediment content. The ice maker operates on water pressure of 20 to 100 psi. In some cases a reverse osmosis water filter system may not be able to maintain the minimum pressure.

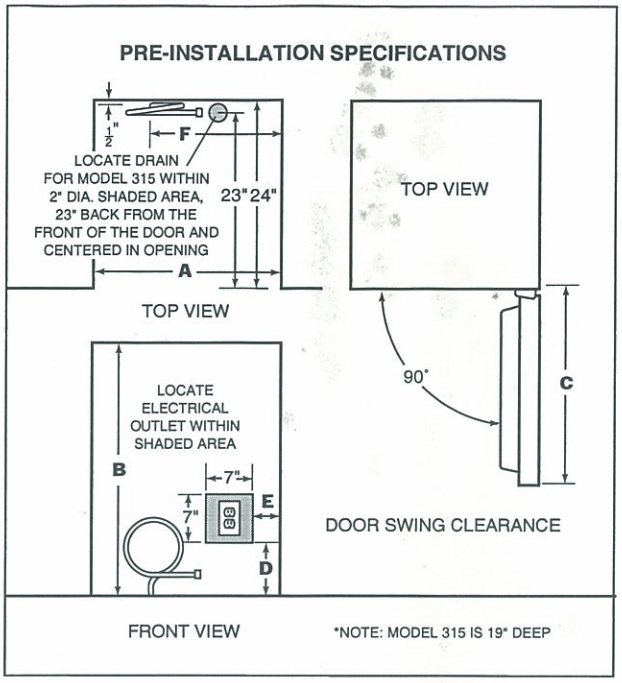

Illus.1

PRE-INSTALLATION SPECIFICATIONS

Model	245	249R	249RP	249FF	249FFI	315*
Finished Rough Opening (A)	24"	24"	24"	24"	24"	15 1/4"
Finished Rough Opening (B)	34 1/2"	34 1/2"	34 1/2"	34 1/2"	34 1/2"	34 1/2"
Minimum Door Clearance at 90° (C)	25 13/16"	25 3/8"	25 3/8"	25 3/8"	25 3/8"	15 1/4"
Minimum Height Required	34 1/4"	34 1/4"	34 1/4"	34 1/4"	34 1/4"	33 3/4"
Recommended Electrical Outlet Location (D)	1"	10 1/2"	10 1/2"	10 1/2"	10 1/2"	10 1/2"
Recommended Electrical Outlet Location (E)	2"	8 1/2"	8 1/2"	2 1/2"	2 1/2"	2 1/2"
Water Supply Location (F)	12"	N/A	N/A	N/A	18"	8"

**Pre-installation specifications for Model 315P are identical to the Model 315.*

200 SERIES

PRE-INSTALLATION SPECIFICATIONS

PLANNING INFORMATION

All 200 Series undercounter units require the same basic planning considerations before installing. Review the installation requirements for your particular unit. These charts and illustrations provide planning information for all Sub-Zero 200 Series models.

Refer to the Pre-Installation Specifications chart for important information regarding area requirements, minimum door clearance, electrical and plumbing placement.

The Model 315 can be ordered with or without a pump. If you order the unit without a pump, you must install a drain. Refer to illustration 1. The drain must be located in a two inch area centered in the opening for the unit, 23-inches back from the front door.

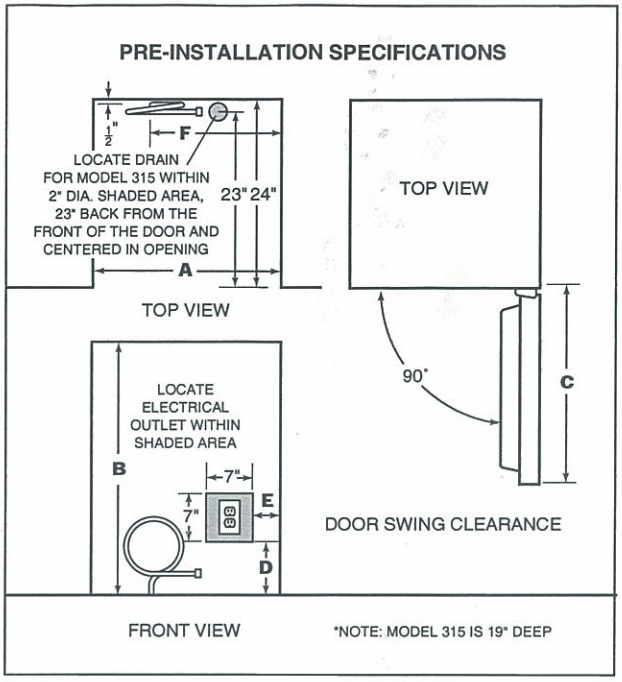

Illus.1

PRE-INSTALLATION SPECIFICATIONS

Model	245	249R	249RP	249FF	249FFI	315*
Finished Rough Opening (A)	24"	24"	24"	24"	24"	15 1/4"
Finished Rough Opening (B)	34 1/2"	34 1/2"	34 1/2"	34 1/2"	34 1/2"	34 1/2"
Minimum Door Clearance at 90° (C)	25 13/16"	25 3/8"	25 3/8"	25 3/8"	25 3/8"	15 1/4"
Minimum Height Required	34 1/4"	34 1/4"	34 1/4"	34 1/4"	34 1/4"	33 3/4"
Recommended Electrical Outlet Location (D)	1"	10 1/2"	10 1/2"	10 1/2"	10 1/2"	10 1/2"
Recommended Electrical Outlet Location (E)	2"	8 1/2"	8 1/2"	2 1/2"	2 1/2"	2 1/2"
Water Supply Location (F)	12"	N/A	N/A	N/A	18"	8"

**Pre-installation specifications for Model 315P are identical to the Model 315.*

200 SERIES

PANEL SPECIFICATIONS

DOOR PANEL – MODELS 315 AND 315P

It is important to understand the differences in mounting any wood panel to the Models 315 and 315P. The panel must be 5/8-inch minimum thickness. You should refer to the illustrations in the Model 315 Installation Instructions to understand how the panel is installed. It does not require a 1/4-inch backer. The maximum door panel weight is 15 pounds.

DOOR PANELS – MODELS 245, 249R, 249RP, 249FF AND 249FFI

Door panels must be 1/4-inch thick around the perimeter. If the panel is thicker than 1/4-inch, an edge must be routed around the panel to ensure a proper fit. Model 245 is the exception. While the edge must be 1/4-inch thick, you must allow 3/8-inch around the perimeter for the frame. See illustrations below. The maximum door panel weight is 20 pounds.

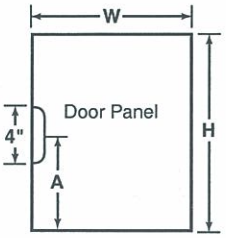

Illus. 2

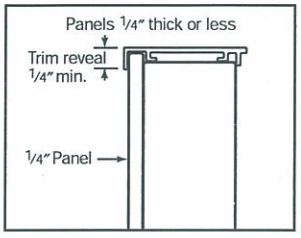

Illus. 3

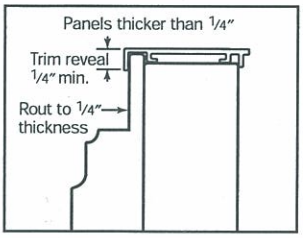

Illus. 4

DOOR PANEL SPECIFICATIONS

Model	245	249R	249RP	249FF	249FFI	315*
(W) Door Panel	23 1/2"	23 5/8"	23 5/8"	23 5/8"	23 5/8"	15"
(H) Door Panel	28 1/8"	30"	30"	30"	30"	30 3/8"
(A) Handle Recess Location	**	15"	15"	15"	15"	**

**Specifications for Model 315P are identical to the Model 315, the door panel must be 5/8" minimum thickness. **Models 245, 315 and 315P require no handle recess.*

200 SERIES

CREATING SOLUTIONS FOR HOME REFRIGERATION

Aside from the full-size units that Sub-Zero offers in its 600, 700 and 400 Series lines of refrigeration and wine storage equipment, we round out our product line-up with a line of traditional undercounter refrigeration.

Our undercounter line consists of two different refrigerator/freezer combinations, an all-refrigerator model, an all-freezer model and an ice maker.

The 200 Series units accept decorative door panels with a maximum weight limit of 15 lbs (6.8 kg) to 20 lbs (9.1 kg), to fit any decor and can be built in to fit flush with virtually any base cabinet style. Optional stainless steel panels and handles for Models 315 and 315P are offered in the classic, platinum and carbon stainless steel finishes and are ordered and shipped as sales accessories. Contact your Sub-Zero dealer for details. Equally important, they are all backed by one of the best warranties in the industry.

These illustrations show the basic model configurations that the Sub-Zero 200 Series offers.

Comprehensive installation instructions are shipped with each unit. Refer to those instructions in preparing and installing all Sub-Zero products, call Sub-Zero Freezer Company at (800) 222-7820 or check our website at www.subzero.com.

For information regarding specific 200 Series models, refer to the charts and illustrations in this section.

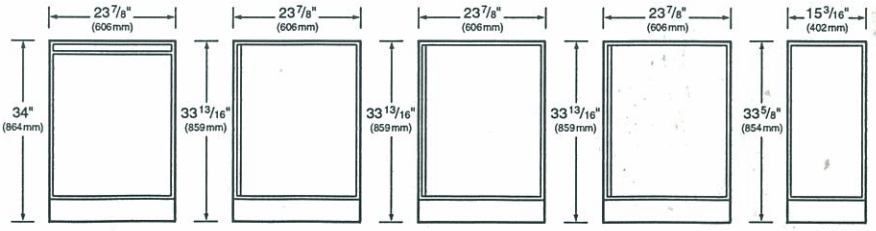

Model 245 Combination	Model 249R Combination	Model 249RP All Refrigerator	Models 249FF/249FFI All Freezer	Models 315/315P Ice Maker

SUB-ZERO®

200 SERIES

Model 245

SPECIFICATIONS

Combination

23 7/8"W x 34"H x 24"D
(606 x 864 x 610 mm)

Refrigerator Capacity
3 cu. ft. (85 L)

Freezer Capacity
1.9 cu. ft. (54 L)

Door Swing Clearance
25 13/16" (656 mm)

Specify LH or RH Door Swing

Annual Energy Usage* $37

Shipping Weight
139 lbs. (63.0 kg)

FEATURES

2 Stationary Shelves

2 Door Shelves

Automatic Ice Maker

Automatic Defrost

**Annual energy costs are based on 8.29 cents per kilowatt hour.*

Model 249R

SPECIFICATIONS

Combination

23 7/8"W x 33 13/16"H x 24"D
(606 x 859 x 610 mm)

Refrigerator Capacity
4.4 cu. ft. (125 L)

Freezer Capacity
.7 cu. ft. (20 L)

Door Swing Clearance
25 3/8" (645 mm)

Specify LH or RH Door Swing

Annual Energy Usage* $30

Shipping Weight
120 lbs. (54.4 kg)

FEATURES

2 Removable Shelves

1 Stationary Shelf

3 Door Shelves

Manual Defrost

Model 249RP

SPECIFICATIONS

All Refrigerator

23 7/8"W x 33 13/16"H x 24"D
(606 x 859 x 610 mm)

Refrigerator Capacity
4.9 cu. ft. (139 L)

Door Swing Clearance
25 3/8" (645 mm)

Specify LH or RH Door Swing

Annual Energy Usage* $28

Shipping Weight
117 lbs. (53.1 kg)

FEATURES

2 Removable Shelves

1 Stationary Shelf

3 Door Shelves

Automatic Defrost

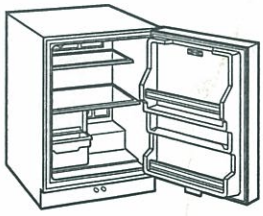

Model 245

Model 249R

Model 249RP

Model 249FF

SPECIFICATIONS

All Freezer

23 7/8"W x 33 13/16"H x 24"D
(606 x 859 x 610 mm)

Freezer Capacity
4.6 cu. ft. (130 L)

Door Swing Clearance
25 3/8" (645 mm)

Specify LH or RH Door Swing

Annual Energy Usage* $40

Shipping Weight
135 lbs. (61.2 kg)

FEATURES

2 Removable Shelves

1 Stationary Shelf

Automatic Defrost

Model 249FFI

SPECIFICATIONS

All Freezer

23 7/8"W x 33 13/16"H x 24"D
(606 x 859 x 610 mm)

Freezer Capacity
4.6 cu. ft. (130 L)

Door Swing Clearance
25 3/8" (645 mm)

Specify LH or RH Door Swing

Annual Energy Usage* $40

Shipping Weight
135 lbs. (61.2 kg)

FEATURES

2 Removable Shelves

1 Stationary Shelf

Automatic Ice Maker

Automatic Defrost

Model 315

SPECIFICATIONS

Ice Maker

15 3/16"W x 33 5/8"H x 24"D
(386 x 854 x 610 mm)

Ice Storage Capacity
26 lbs. (11.8 kg)

Door Swing Clearance
15 1/4" (387 mm)

Reversible Door Swing

Shipping Weight
100 lbs. (45.4 kg)

OPTIONAL PANELS**

Classic Stainless Steel

Platinum Stainless Steel

Carbon Stainless Steel

FEATURES

Automatic Ice Maker

Automatic Defrost

***Stainless steel panel and handle are ordered and shipped as sales accessories.*

Model 315P

SPECIFICATIONS

Ice Maker

15 3/16"W x 33 5/8"H x 24"D
(386 x 854 x 610 mm)

Ice Storage Capacity
26 lbs. (11.8 kg)

Door Swing Clearance
15 1/4" (387 mm)

Reversible Door Swing

Shipping Weight
100 lbs. (45.4 kg)

OPTIONAL PANELS**

Classic Stainless Steel

Platinum Stainless Steel

Carbon Stainless Steel

FEATURES

Automatic Ice Maker

Automatic Defrost

Pump Feature

***Stainless steel panel and handle are ordered and shipped as sales accessories.*

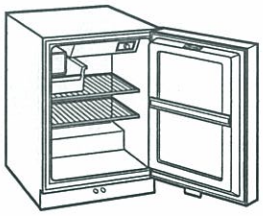

Model 249FF

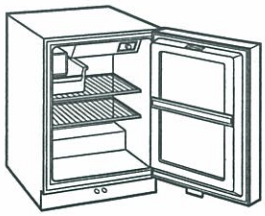

Model 249FFI

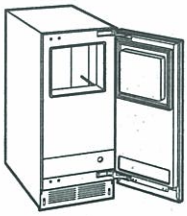

Model 315

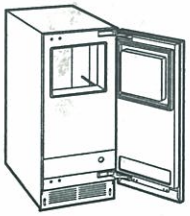

Model 315P

PLANNING INFORMATION

All 200 Series undercounter units require the same basic planning considerations before installing. Review the installation requirements for your particular unit. These charts and illustrations provide planning information for all Sub-Zero 200 Series models.

Refer to the Pre-Installation Specifications chart and illustration 1 for important information regarding area requirements, minimum door clearance, electrical and plumbing placement.

The Model 315 can be ordered with or without a pump. If you order the unit without a pump, you must install a drain. Refer to illustration 1. The drain must be located in a 2" (51 mm) area centered in the opening for the unit, 23" (651 mm) back from the front door.

PLUMBING

For Models 245, 249FFI and 315, rough in the water supply line. Connect a 1/4" OD copper line to the house supply, being sure to use an easily accessible shut off valve between the supply and the refrigerator.

Do not use "self-piercing" valves. A saddle valve kit (part number 4200880) is available from your Sub-Zero dealer. An in-line filter is required when water conditions have a high sediment content. The ice maker operates on water pressure of 20 psi (1.4 bar) to 100 psi (6.9 bar). In some cases a reverse osmosis water filter system may not be able to maintain the minimum pressure.

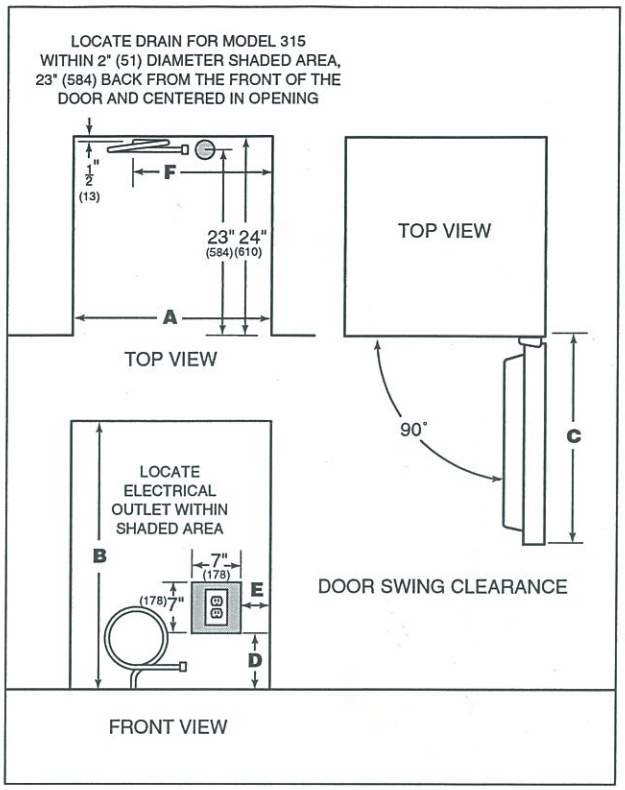

Illus. 1

NOTE: Dimensions in parentheses are in millimeters.

PRE-INSTALLATION SPECIFICATIONS

Model	245	249R	249RP	249FF	249FFI	315
Finished Rough Opening Width (A)	24"(610)	24"(610)	24"(610)	24"(610)	24"(610)	15 1/4"(387)
Finished Rough Opening Height (B)	34 1/2"(876)	34 1/2"(876)	34 1/2"(876)	34 1/2"(876)	34 1/2"(876)	34 1/2"(876)
Minimum Door Clearance at 90° (C)	25 13/16"(656)	25 3/8"(644)	25 3/8"(644)	25 3/8"(644)	25 3/8"(644)	15 1/4"(387)
Minimum Height Required	34 1/4"(870)	34 1/4"(870)	34 1/4"(870)	34 1/4"(870)	34 1/4"(870)	33 3/4"(857)
Recommended Electrical Outlet Location (D)	1"(25)	10 1/2"(267)	10 1/2"(267)	10 1/2"(267)	10 1/2"(267)	10 1/2"(267)
Recommended Electrical Outlet Location (E)	2"(51)	8 1/2"(216)	8 1/2"(216)	2 1/2"(63)	2 1/2"(63)	2 1/2"(63)
Water Supply Location (F)	12"(305)	N/A	N/A	N/A	18"(457)	8"(203)

NOTE: Pre-installation specifications for Model 315P are identical to the Model 315.
NOTE: Dimensions in parentheses are in millimeters.

ELECTRICAL

A 115 volt, 60 Hz, 15 amp fused electrical supply is required. It is recommended that a separate circuit, serving only this appliance, be provided.

All Sub-Zero 200 Series units are equipped with a power supply cord with a 3-prong grounding plug and it must be plugged into a mating 3-prong grounding type wall receptacle. Follow the National Electrical Code and local codes and ordinances when installing the receptacle. Refer to the Pre-Installation Specifications chart and illustration 1 on page 58 for exact specifications.

INTEGRATING CABINETRY

The Door Panel Specifications chart and illustration 2 provide necessary door panel sizing information.

DOOR PANEL SPECIFICATIONS

	Door Panel Dimensions
Model 245	23 1/2" (597) W x 28 1/8" (714) H
Model 249R	23 5/8" (600) W x 30" (762) H
Model 249RP	23 5/8" (600) W x 30" (762) H
Model 249FF	23 5/8" (600) W x 30" (762) H
Model 249FFI	23 5/8" (600) W x 30" (762) H
Model 315	15" (381) W x 30 3/8" (771) H x 5/8" (16) min thick
Model 315P	15" (381) W x 30 3/8" (771) H x 5/8" (16) min thick

NOTE: Models 245, 315 and 315P require no handle recess.
NOTE: Dimensions in parentheses are in millimeters.

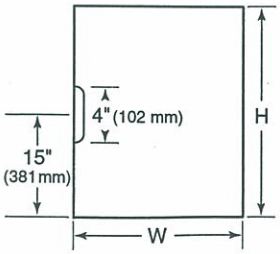

Illus. 2

DOOR PANELS – MODELS 245, 249R, 249RP, 249FF AND 249FFI

Door panels must be 1/4" (6 mm) thick around the perimeter. If the panel is thicker than 1/4" (6 mm), an edge must be routed around the panel to ensure a proper fit. Model 245 is the exception. While the edge must be 1/4" (6 mm) thick, you must allow 3/8" (10 mm) around the perimeter for the frame. See illustrations 3 and 4. The maximum door panel weight is 20 lbs (9.1 kg).

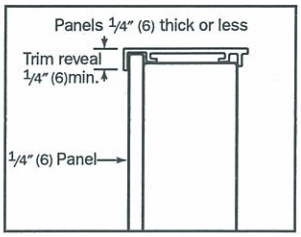

Illus. 3

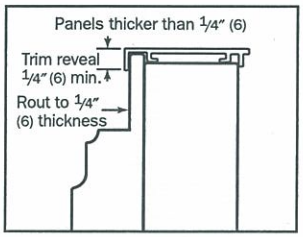

Illus. 4

IMPORTANT NOTE: The Model 245 lower hinge extends out from the side of the unit in the area of the kickplate. When the unit is installed tightly against a full-depth panel or cabinet, there can be interference. Refer to the full-scale illustration on page 61.

DOOR PANEL – MODELS 315 AND 315P

It is important to understand the differences in mounting any wood panel to the Models 315 and 315P. The panel must be 5/8" (16 mm) minimum thickness. You should refer to the illustrations in the Model 315 Installation Instructions to understand how the panel is installed. It does not require a 1/4" (6 mm) backer. The maximum door panel weight is 15 lbs (6.8 kg).

MODELS 315 AND 315P – GRAVITY DRAIN OR DRAIN PUMP

This ice maker can be ordered with a pump (Model 315P) or without a pump (Model 315). Models without a drain pump drain their water by gravity. However, gravity drain models may be converted to pump models through the installation of a drain pump kit and drain pump.

Specific step-by-step instructions are included with the drain pump kit. Contact your Sub-Zero dealer for specifics.

The drain and inlet water tubes must be plumbed before connecting to the ice maker. For the gravity drain, all horizontal runs of drain lines must have a 1/4" (6 mm) per 1' (305 mm) fall. An air gap will likely be required between the ice maker drain tube and the drain/waste receptacle. A stand pipe with a trap below it would be acceptable for the drain/waste receptacle. Refer to illustration 5 for the Model 315 gravity drain and illustration 6 for the Model 315P drain pump.

IMPORTANT NOTE: Poor draining will cause a high rate of ice melting in the bin.

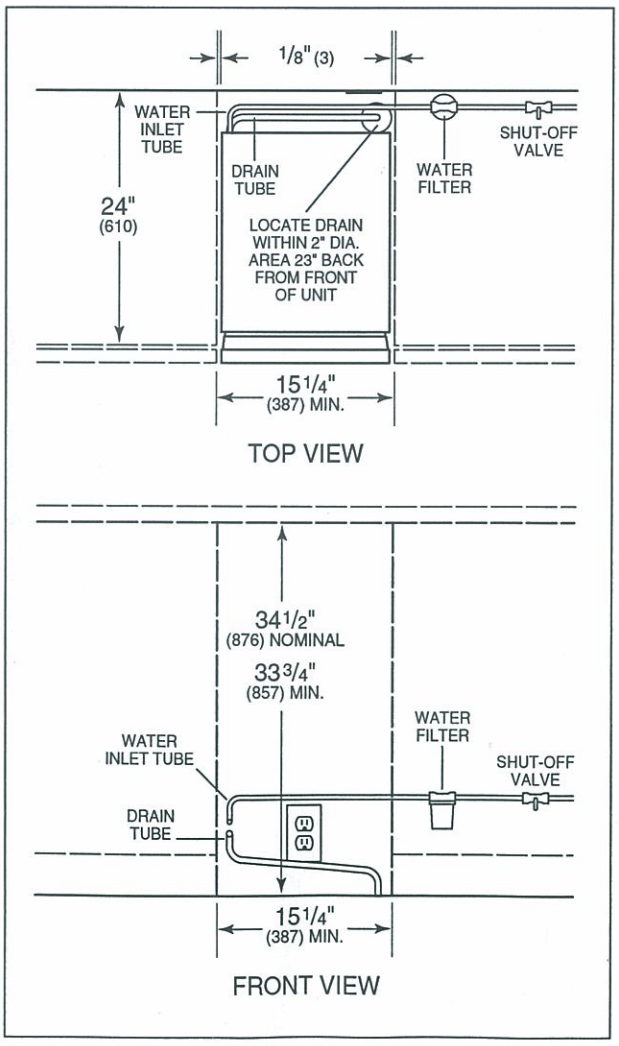

NOTE: Dimensions in parentheses are in millimeters.

Illus.5

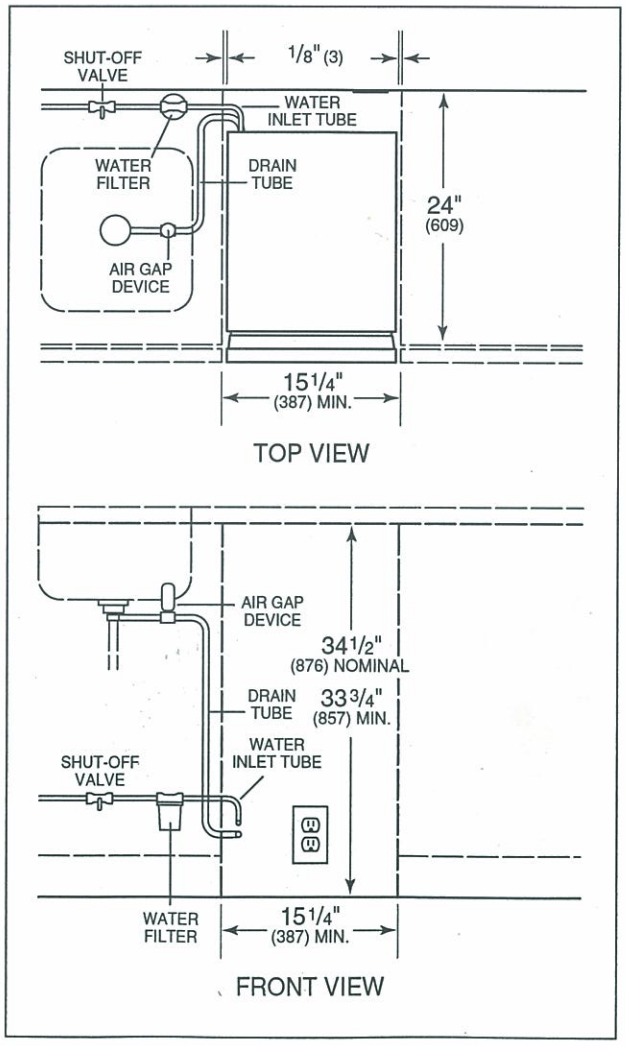

NOTE: Dimensions in parentheses are in millimeters.

Illus. 6

MODEL 245 – LOWER HINGE

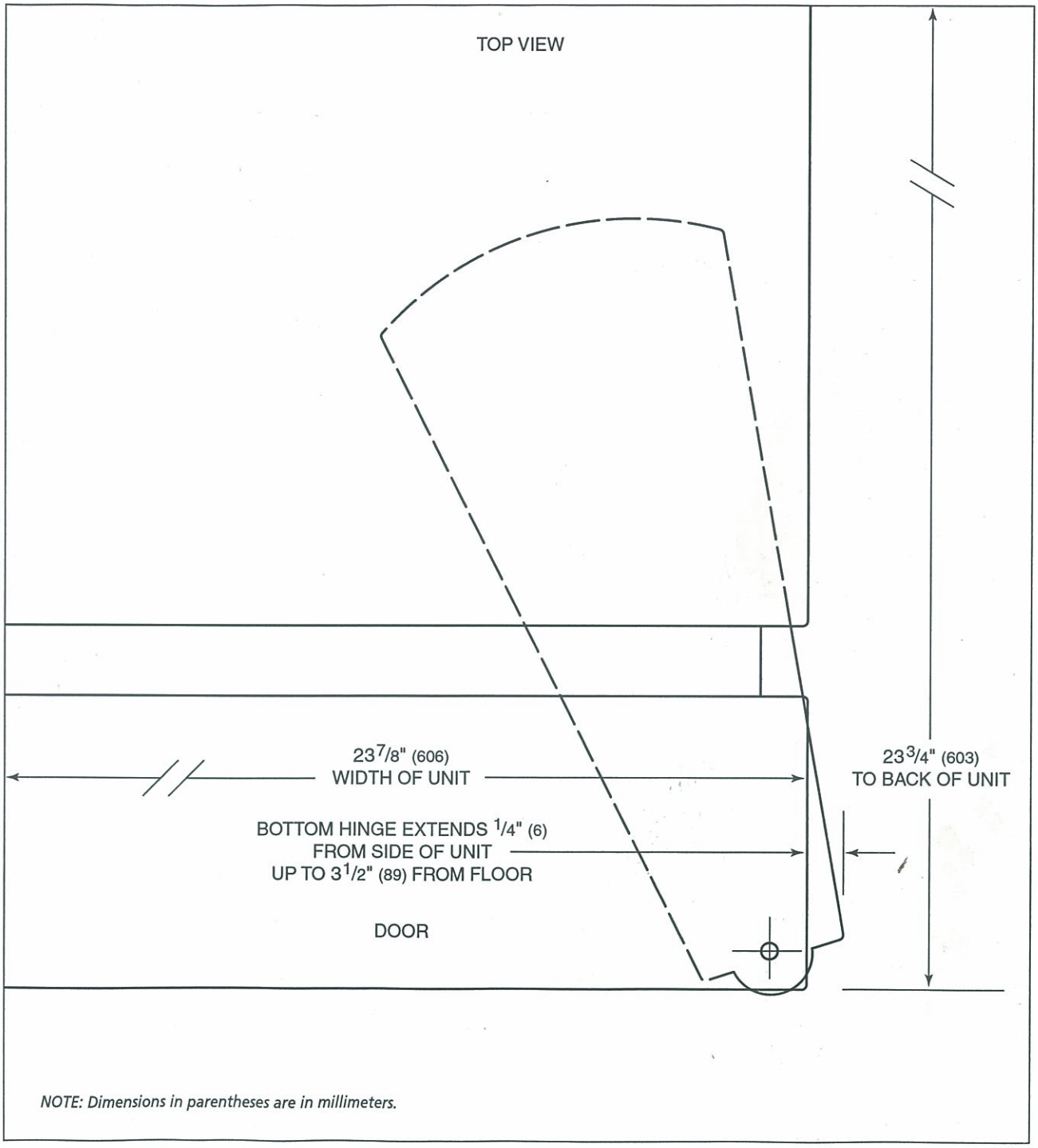

NOTE: Dimensions in parentheses are in millimeters.

SUB-ZERO FREEZER COMPANY PRODUCTS LIMITED WARRANTY

RESIDENTIAL USE ONLY

FULL FIVE YEAR WARRANTY AND LIMITED SIXTH THROUGH TWELFTH YEAR WARRANTY ON THE SEALED SYSTEM

FULL TWO YEAR WARRANTY ON TOTAL PRODUCT

FULL FIVE YEAR SEALED SYSTEM WARRANTY

For five years from the date of original installation, the Sub-Zero warranty covers all parts and labor to repair or replace any components that prove to be defective in materials or workmanship in the sealed system. The sealed system consists of the compressor, condenser, evaporator, drier and all connecting tubing.

FULL TWO YEAR WARRANTY

For two years from the date of original installation, the Sub-Zero warranty covers all parts and labor to repair or replace any part of the product which proves to be defective in materials or workmanship.

LIMITED SIXTH THROUGH TWELFTH YEAR WARRANTY

From the 6th through the 12th year from the date of original installation, the Sub-Zero warranty covers all parts that prove to be defective in materials or workmanship in the sealed system (parts only). The sealed system consists of the compressor, condenser, evaporator, drier and all connecting tubing.

TERMS APPLICABLE TO EACH WARRANTY

All service provided by Sub-Zero under the above warranty must be performed by authorized Sub-Zero service representatives, unless otherwise specified by Sub-Zero. Service will be provided in the home during the normal business hours. This warranty applies only to products installed for normal residential use. Details regarding a non-residential warranty are available upon request.

The warranty applies only to products installed in any one of the fifty states of the United States, the District of Columbia or the ten provinces of Canada. This warranty does not cover any parts or labor to correct any defect caused by negligence, accident or improper use, maintenance, installation, service or repair, including but not limited to improper removal and reinstallation (whether in the unit or at a remote location) of the condensing unit.

The remedies described above for each warranty are the only ones which Sub-Zero will provide, either under these warranties or under any warranty arising by operation of law. Sub-Zero will not be responsible for any consequential or incidental damages arising from the breach of these warranties or any other warranties, whether express, implied or statutory.

Some states do not allow the exclusion or limitation of incidental or consequential damages, so the above limitation or exclusion may not apply. This warranty gives owners specific legal rights and owners may also have other legal rights which vary from state to state.

To receive parts and/or service and the name of the nearest Sub-Zero authorized service representative, contact your Sub-Zero dealer, distributor or Sub-Zero Freezer Company, Customer Service Department, P. O. Box 44130, Madison, WI, 53744-4130, call (800) 222-7820 or e-mail us at customerservice@subzero.com.

SUB-ZERO®

7

8

Operating and installation Instructions for Encapsuled Dry-Type Transformers

General

The encapsulated. dry-type transformer is a totally enclosed, non-ventilated, compound filled, insulating transformer which has been completely assembled at the factory and is ready for operation. these the factory and is ready for operation. these transformers are completely encased in a sturdy steel housing. a large wiring compartment witth conduit knockouts permits fast wiring connetion. this wiring comparments is accesible by rempvable cover.

Inspection

The transformer should be unpacked as soon as it is received and examined (or possible damage during shipment.should damage be found, a claim should be shiment. should damage be found. a claim should be filed inmediately with the transportation company.

Handling

Care should be exercised in handling dry-type transformers. Lifting eyes or similar lifting means are provided on most sizes.

Installation

These encapsuled dry-type transformers are UL listed for indoor/outdoor applications. they may be installed on walls, beams, platforms, floors, or other locations. They are ideal for applications in dusty industrial areas.

(over)

Dry-type transformer must be protected by lightning arresters or other suitalble equipment from outside lines wich may caise lightning and swiching surges to be transmitted to the transformer. the enclousure should be grounded to a water pipe or similar type of effective common ground. transformers should not be loaded beyond threir nameplate rating sine overloads will result in a reduced life expectancy.

Connections

Refer to the nameplate for voltage combinations, frequency, number of phases, and tap connections. fourther wiring connections and diagrams are included with buck-boost transformers. caution: do not make any connections other than those shown on the nameplate or connection diagram. all leads not being used must be properly insulated.

Maintenance

Practically no maintenance is required on a dry-type transformer. encapsuled types only require wiping off dust or dirt from the outside of the case.

INSTALLATION INSTRUCTIONS & INSTALLER CAUTIONS
GROUND FAULT CIRCUIT INTERRUPTER (GFCI)
TO BE INSTALLED BY A QUALIFIED ELECTRICIAN ONLY

CAUTIONS TO THE INSTALLER–

- Install only on following electrical systems:
  120/240 VAC Single phase 3 wire system
  208Y/120 VAC Three phase 4 wire system
- Do not reverse feed or back wire this GFCI, and observe proper wire terminations on GFCI.
- Do not subject this GFCI to megger, high voltage, or hi–pot tests. (Reference Sec. 550–12, 1999 NEC) Remove any GFCI's from equipment to be tested before applying high test voltages or the GFCI's will be damaged.
- To minimize false tripping, do not connect this GFCI to swimming pool circuits installed prior to 1965 NEC regulations.
- Electric ranges and clothes dryers with frames grounded by connection to the grounded conductor as permitted by the NEC should not be connected to the load circuit of this GFCI.
- Single pole GFCI's cannot be used to protect 3 wire shared neutral circuits. A 2 pole GFCI should be used for this application.
- 2 Pole GFCI's may be used to protect 240 VAC 2 wire circuits (no "load neutral" wire). The white wire of the GFCI must be connected to the panel neutral bar.

INSTALLATION INSTRUCTIONS–

- Installation procedure is the same for both single and two pole ground fault interrupters except for the additional load power connection required for the two pole GFCI.
- **Before installing a GFCI, disconnect all power supplying this equipment.**

1. Move handle of GFCI to "OFF".
2. Plug–in or bolt–on GFCI into end use equipment.
3. Connect white GFCI pigtail (panel neutral) to neutral bar of end use equipment. Torque per neutral bar requirements.
4. Connect ground wire (green or bare) of the circuit to be protected to the ground lug or bar in the end use equipment. Torque per ground bar/lug requirements.
5. If applicable, connect white wire of the circuit to be protected to the wire connector of the GFCI marked "load neutral". Torque per marking on side of GFCI.
6. Connect the "hot" (black or red) wire(s) of the circuit to be protected to the wire connector(s) of the GFCI marked "load power". Torque per marking on side of GFCI.
7. Reconnect power to the equipment.
8. Move the GFCI handle to "ON". If GFCI handle moves to "OFF" or "TRIPPED" position, refer to "Trouble Shooting Instructions" on reverse side of this page.
9. With GFCI handle "ON", test the ground fault function of the device by pressing the red "TEST" button. The GFCI handle must move to "OFF" or "TRIPPED". If the GFCI does not trip, refer to "Trouble Shooting Instructions" on reverse side of this page.
10. Attach the "Test Instruction Label" to the front of the enclosure. Apply the "Test Reminder Label" to a conspicuous location on the enclosure.
11. The occupant should be informed about the importance of the test procedure and recording the test dates on the "Test Reminder Label".
12. To report suspicious breaker tripping call the toll free Cutler–Hammer help desk phone at (800) 326–9513.

Figure 1

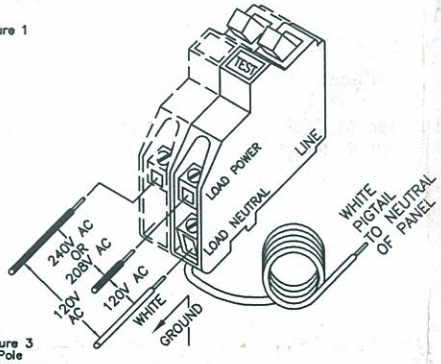

Figure 2
2 Pole

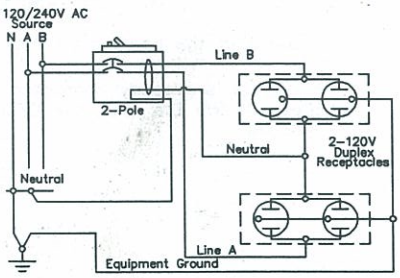

Figure 3
2 Pole

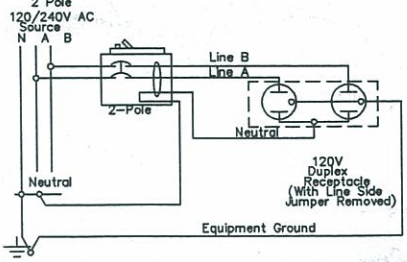

Figure 4
2 Pole

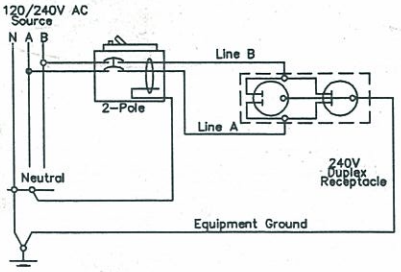

Cutler-Hammer

TROUBLE SHOOTING INSTRUCTIONS

First, recheck the installation instructions, Steps 1 thru 7, for correct wiring.

Malfunction of a circuit employing a GFCI should first be identified under one of the three following general classifications:

I. GFCI TRIPS IMMEDIATELY AFTER RESETTING.

II. GFCI TRIPS AFTER SOME TIME DELAY.

III. GFCI WILL NOT TRIP WHEN TEST BUTTON IS PUSHED.

After classifying the type of failure under I, II, or III above, follow the specific steps listed below under the appropriate General Classification I, II, or III.

I. GFCI TRIPS IMMEDIATELY AFTER RESETTING.

A. Disconnect all appliance loads and reset the GFCI. If the GFCI does not trip, it indicates:

1. Leakage current to ground exceeding GFCI trip level in the appliance loads. Using a GFCI on circuits supplying multiple switching power supplies such as those used in computers or other electronic equipment may result in tripping due to the inherent leakage of these switching power supplies. If total leakage of the circuit exceeds 5 milliamps nominal, the GFCI will sense this leakage and trip. If this occurs, it is recommended that the equipment be split up and placed on two or more GFCI–protected circuits.

2. Appliance ground wire and neutral wire are interchanged or in contact with each other.

3. Appliance has a "dead short" and the circuit breaker portion of the GFCI is tripping. Eliminate the short.

B. If GFCI still trips, disconnect the "Load Power" wire(s) from the GFCI and reset.

1. If GFCI does not trip, excessive leakage exists in the premise wiring. Check for defective insulation, wet conductors, or runs exceeding 250 ft. one–way load conductor length.

C. If GFCI still trips, disconnect the "Load Neutral" wire(s) from the GFCI and reset.

1. If GFCI does not trip, the neutral wire is grounded.

D. If GFCI still trips, with the white GFCI wire connected to the neutral bar, the GFCI has been damaged or is malfunctioning, and the GFCI should be replaced.

II. GFCI TRIPS AFTER SOME TIME DELAY.

A. The circuit is overloaded and the circuit breaker in the GFCI is tripping to protect the wiring. Reduce the load so that the load is within the rating of the circuit breaker per applicable codes.

III. GFCI WILL NOT TRIP WHEN TEST BUTTON IS PUSHED.

A. Check that the white GFCI wire is securely connected to the neutral bar.

B. Check that the panel main breaker is "ON" and that GFCI has proper voltage.

C. If neutral is properly connected and power to GFCI is "ON", and pushing "TEST" button does not trip the GFCI, the GFCI has been damaged or is malfunctioning and should be replaced.

PLACE THIS LABEL IN A CONSPICUOUS LOCATION

TEST REMINDER

For maximum protection against electric shock, operate test button on ground—fault circuit interrupter at least once a month. Record date below.

This device does not guard against electrical shock hazard resulting from contact with any two circuit conductors.

YEAR	JAN	FEB	MAR	APR	MAY	JUNE	JULY	AUG	SEPT	OCT	NOV	DEC

Cutler—Hammer 30—11581

TEST G.F.C.I. at least once a month. Push test button(s) on G.F.C.I., the handle(s) should move to the "TRIP" or "OFF" position indicating power is disconnected from that circuit. Failure to trip indicates that you have lost protection and should notify an electrican. To restore power, reset G.F.C.I. circuit breaker. Enter "TEST" date on occupants test reminder label.

DO NOT CONNECT TO SWIMMING—POOL EQUIPMENT INSTALLED BEFORE ADOPTION OF THE 1965 NATIONAL ELECTRICAL CODE, TO OBTAIN MAXIMUM PROTECTION AGAINST ELECTRICAL SHOCK HAZARD, ELECTRIC RANGES AND CLOTHES DRYERS WHOSE FRAMES ARE GROUNDED BY CONNECTION TO THE GROUNDED CIRCUIT CONDUCTOR AS PERMITTED BY THE NATIONAL ELECTRICAL CODE SHOULD NOT BE CONNECTED IN THE LOAD CIRCUIT OF THIS DEVICE.

Place this label in a conspicuous location on front exterior of enclosure.

Cutler—Hammer 30—11582

APPLY THESE LABELS TO ALL OUTLET RECEPTACLE PLATES ON THE CIRCUIT PROTECTED BY THIS CIRCUIT BREAKER GFCI.

CIRCUIT BREAKER GFCI PROTECTED

CIRCUIT BREAKER GFCI PROTECTED

CIRCUIT BREAKER GFCI PROTECTED

CIRCUIT BREAKER GFCI PROTECTED

CIRCUIT BREAKER GFCI PROTECTED

CIRCUIT BREAKER GFCI PROTECTED

CIRCUIT BREAKER GFCI PROTECTED

CIRCUIT BREAKER GFCI PROTECTED

30-11351 REV. (3)

READ AND OBSERVE THIS WARNING

1. Do not use this product except for pumping or transferring water or water based liquids.
2. Inspect the appearance and operation of this product before installation and bi monthly thereafter.
3. Serious and potentially dangerous product degradation will result from exposure to acids, prolonged sun light or temperatures above 150°F.
4. Replace worn or broken parts with factory replacements only.
5. Disassemble at the end of boating season and lubricate moving parts with the Dow Corning 44 grease provided.

BOAT OWNERS SPECIAL WARNING

Install and use safe sea-cocks on all thru hull fittings.
SEA-LECT ACCESSORIES® are intended to be used only with Guzzler® hand operated pumps. Premature failure could occur if used with pumps of other manufacturers.

This valve is capable of being used in either of the following modes.

2 position mode

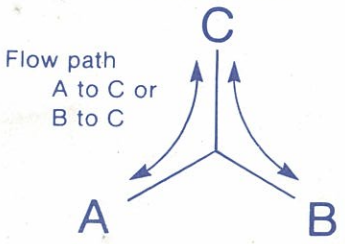

3 position mode

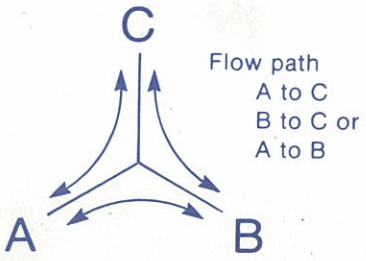

Valves leave the factory assembled for the 2 position mode. To convert for the 3 position mode, remove the screw holding the operating lever, lift off the lever and remove three screws holding the bonnet, remove the bonnet, and take out the stop ring. This is the semi-circular piece. Reassemble the components without the stop ring.

THE BOSWORTH COMPANY

Installation, Operation and Maintenance Instructions for Encapsulated Transformers

WARNING:

ELECTRICAL POTENTIALS HAZARDOUS TO HUMAN LIFE CAN EXIST WITHIN THIS EQUIPMENT WHEN ENERGIZED. DISCONNECT ALL INPUT POWER BEFORE OPENING CASE OR TOUCHING INTERNAL PARTS. USE PROPER LOCK-OUT/TAG-OUT PROCEDURES.

THE INFORMATION CONTAINED HEREIN MAY NOT COVER ALL VARIATIONS IN EQUIPMENT OR PROVIDE FOR ALL CONTINGENCIES WHICH MIGHT BE MET IN INSTALLATION, OPERATION AND MAINTENANCE.

INTRODUCTION

Transformers covered by this manual include single phase and three phase encapsulated units, 600 Volt Class.

This is a high quality product, however, it is possible to misapply or unknowingly abuse a transformer and thus reduce its life.

These installation, operating and maintenance instructions set out the limiting factors for satisfactory performance of the transformers. The information contained herein outlines and describes the proper inspection, installation and maintenance of the dry type transformers covered by this manual.

INSPECTION UPON RECEIVING

Transformers should be carefully inspected upon receipt to ensure that no damage has occurred during shipment. Any damage should be reported at once and a claim placed against the transportation company.

INSPECTION DURING INSTALLATION

The transformer should be carefully inspected for any damage due to handling after receipt. The nameplate rating on the unit should be checked against the job specifications to ensure installation of the correct transformer.

- The transformer should be connected only as described on its nameplate.
- Taps should be adjusted, if necessary, to match the available line voltage.
- Any bolted electrical connections, including taps, should be checked and tightened since fasteners may have loosened during shipment.

STORAGE

Transformers should be stored in a dry location of uniform temperature in their original packing. Outdoor storage is to be avoided, but if necessary, the transformer must be fully protected against moisture and foreign materials. Condensation and absorption of moisture can be reduced by use of heaters. If transformer has been subjected to moisture or condensation, it should be baked out before energizing.

TRANSFORMER MOUNTING & SPACING

Air cooled transformers depend upon the surrounding air for cooling. The free flow of air is important as is the air temperature. A transformer must be mounted so that air can freely circulate all around it.

Do not place combustible materials on or near transformer or mount transformer closer than 3 inches from any adjacent wall.

Transformers must never be mounted next to or above heat generating equipment.

INSTALLATION & OPERATING SAFETY

Transformers are provided with access covers to facilitate installation and should never be operated without these access covers securely mounted in place.

CAUTION:
ONLY QUALIFIED PERSONNEL SHOULD INSTALL, INSPECT, OR MAINTAIN TRANSFORMERS SINCE THE NORMAL OPERATING VOLTAGES CAN BE HAZARDOUS.

A safety program must be established, verified and followed.

GROUNDING

The enclosure should be grounded securely and effectively as a safety precaution.

Grounding must be in accordance with NEC and local electrical codes.

TRANSFORMER SOUND

Transformers, like other electromagnetic devices, produce sound whose primary cause is the magnetic energy in the transformer core. The relative loudness of the sound depends upon the construction of the transformer, the manner of installation, the ambient sound level of the installation and the sensitivity of the individual listener. Transformers are "sound-controlled" in construction so that sound levels consistent with industry standards are achieved.

TRANSFORMER PERFORMANCE

Transformers are designed to have an average sound level below industry sound level limits when tested in accordance with NEMA ST 20 (IEEE C57.12.91 sec 13).

The NEMA maximum allowable average of the readings in decibels are as follows:

Transformer kVA Rating	NEMA Maximum dB* Ratings
0-9	40
10-50	45
51-150	50
151-300	55
301-500	60
501-700	62
701-1000	64

*Decibels-Unit for measuring the loudness of sound.

INSTALLATION OF THE TRANSFORMER

Proper installation of the transformer is required since a quiet transformer can develop objectionable sound levels unless certain basic rules are followed.

For a Quiet Installation:

- Consider the installation and location of the transformer before the building is built. Building modifications to correct sound can be expensive.
- Place sound dampening pads between the transformer and its mounting surface.
- Use flexible conduit coupling between the transformer and the wiring system.
- Install transformer as far away as possible from any area where sound is objectionable.

TRANSFORMER DESIGN FEATURES

ENCLOSURE STYLE

A wiring compartment, located below the core and coil, provides cool operation and accessibility of connections.

Ventilation must not be blocked or restricted in any way that will reduce the flow of air around the transformer.

INSULATION SYSTEM

Encapsulated transformers are designed and manufactured with UL Recognized Class 180° C insulation systems. These systems are rated for operation in an environment with an average ambient temperature of 30°C with a maximum of 40°C.

Average winding temperature rises are rated at 95° C, 115°C and 135°C above ambient temperature.

The insulation rating is guaranteed for altitudes of less than 3300 feet (1005 m) above sea level.

Overloading, operating in ambient temperatures greater than 40°C and/or elevation greater than 3300 feet will result in reduction of transformer life unless derating of the unit is calculated using IEEE Loading Guide in IEEE C57.96
Fully loaded transformers may appear excessively warm to the touch, particularly on the top cover of the unit. Standards permit the top temperature to reach 80°C over ambient temperature. This represents normal heating and should not cause concern.

Overloads can be tolerated without exceeding the maximum allowable insulation temperature provided the overload is of short time duration and is preceded and followed by a period of operation at less than rated kVA. The actual conditions and characteristics of the loading cycle must be known in order to calculate the proper kVA rating of the transformer. Refer to Guide for Loading of Dry Type Transformers IEEE C.57.96. Ambient temperatures above 30° C average with a 40° C maximum require either larger kVA ratings or special low temperature rise transformers.

Altitude correction for application of a standard transformer in altitudes above 3300 feet, can be made by reducing the load. Refer to Altitude Correction Factor in IEEE C57.96.

TRANSFORMER LIFE

Transformer life is dependent upon the thermal degradation of the insulation system which in turn is dependent upon the winding temperature and duration of operation at that temperature.

Factors which affect transformer life are line voltage, load current, load cycle, ambient temperature, and other environmental conditions such as moisture, corrosive atmosphere, vibration, and maintenance. Normal conditions of operation are covered in this standard operating procedure and various Industry Standards.

MAINTENANCE

Transformers contain no moving parts and require very little maintenance. Periodic inspection and care are recommended practices especially if the transformer is operating in a harsh environment.

Inspect for loose connections, condition of terminal board, condition of splices, overheating, rust, paint deterioration, and general condition of the unit. Corrective measures should be taken if necessary.

Removal of dust, dirt and debris from the external enclosure surfaces is encouraged and may be performed while the transformer is in operation.

If maintenance includes removal of enclosure panels, the transformer must be de-energized. The use of lock-out/tag-out practices is required.

CAUTION:

ALTHOUGH TRANSFORMERS ARE STATIC DEVICES, IT IS NECESSARY TO USE FORETHOUGHT COUPLED WITH CARE IN INSTALLATION. THIS WILL RESULT IN SATISFACTORY PERFORMANCE OVER A LONG PERIOD OF TIME. THE MINIMUM REQUIREMENTS FOR INSTALLATION AND MAINTENANCE AND LIMITATIONS OF OPERATION HAVE BEEN SET FORTH IN THIS MANUAL. FOLLOWING THESE PROCEDURES WILL RESULT IN SATISFACTORY PERFORMANCE, WHEREAS DISREGARDING THEM CAN VOID THE WARRANTY.

Document revised 0705
004-0964-000

The BOSWORTH Company

Cam & Groove Fittings

Barbed Fittings

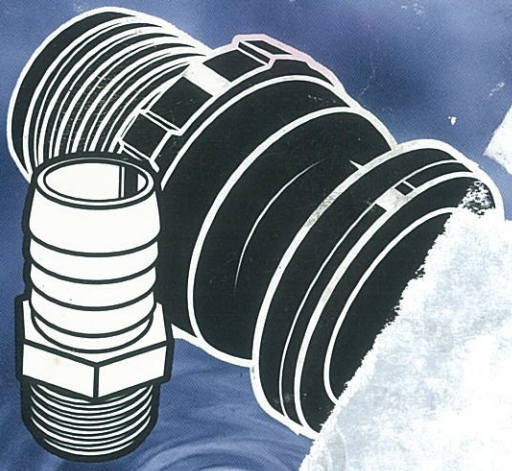

930 Waterman Aven

Barbed Fittings *(Nylon)*

Straight Fitting

NPT		Hose Size	Part No.
½"	X	⅜"	N - 4 - 3
½"	X	½"	N - 4 - 4
½"	X	⅝"	N - 4 - 5
½"	X	¾"	N - 4 - 6
¾"	X	⅜"	N - 6 - 3
¾"	X	½"	N - 6 - 4
¾"	X	⅝"	N - 6 - 5
¾"	X	¾"	N - 6 - 6
¾"	X	1"	N - 6 - 8

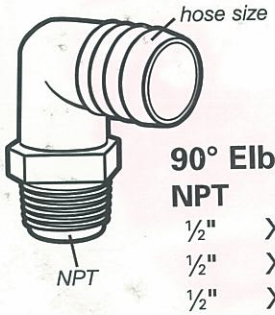

90° Elbow Fitting

NPT		Hose Size	Part No.
½"	X	⅜"	L - 4 - 3
½"	X	½"	L - 4 - 4
½"	X	⅝"	L - 4 - 5
½"	X	¾"	L - 4 - 6
¾"	X	⅜"	L - 6 - 3
¾"	X	½"	L - 6 - 4
¾"	X	⅝"	L - 6 - 5
¾"	X	¾"	L - 6 - 6
¾"	X	1"	L - 6 - 8

These inexpensive fittings help make quick, tight connections to your pump.

The Bosworth Company

930 Waterman Avenue
East Providence, RI 02914
(401)438-1110

Distributed by:

The Bosworth Company

Sea-lect® Diverting Valves

The Original True Y-Valve

930 Waterman Avenue, East Providence, RI 0291

Base mounting Dimensions (94 & 95)

Three 3/16" diameter holes on a 3 1/4" diameter bolt circle

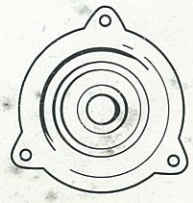

Flush mounting Dimensions

94: 7/8" center hole and three 3/16" diameter holes equi-spaced on a 2" diameter bolt circle

95: 7/8" center hole and three 3/16" diameter holes equi-spaced on a 2 3/8" diameter bolt circle

Custom deck plates available. Made
tion. Consult factory for you

The BOSWORTH Company

Distributed by:

930 Waterman Avenue
East Providence, RI
(401) 438-1110
fax (401) 438-271
toll-free (888) 43
e-mail: boswor
www.thebosw

ISO 15083

B.N. DULAY TRUX LTD.
220 - 12611 VULCAN WAY
RICHMOND, B.C.
V6V 1J7
PH - 604-273-5333 FAX - 604-273-5323

PRO # 11648

Shipper	SILHOUETTE STEEL, LTD.
Origin	SURREY, BC
Customer	CH2M HILL POLAR SERVICES.
Address	ENGLEWOOD, CO

SHIP TO: SKIDAWAY INSTITUTE OCEANOGRAPHY
10 OCEAN SCIENCE CIRCLE
SAVANNAH, GA

SHORT FORM BILL OF LADING AND TRUCKLOADING ORDER COMBINED
- ISSUED AT SHIPPER'S REQUEST -

ANY EXCEPTION MUST BE NOTED AT TIME OF DELIVERY

P/U DATE	TRUCK NO.	TRAILER NO.	TRIP NO.	CUST. ORDER NO.	PICK UP NO.
03/13/09	1793	53960B	06		ARC0520837

PRESS HARD YOU ARE MAKING 4 COPIES

NO PCS	DESCRIPTION OF GOODS	WEIGHT F.B.M.	RATE	AMOUNT
1	PORTABLE INTERMODAL LAB / 10' CONTAINER. AND PARTS.			
			C.O.D. FEE	
RECVD. BY Harry Clark	DEL. DATE 03/23/09	DRIVER'S SIGNATURE NORMAL	TOTAL	

It is mutually agreed as to each carrier of all said good over all or any portion of said route to destination and as to each party at any time interested in all or said good that every service to be performed hereby shall be subject to all the terms and conditions (which are hereby incorporated by reference and have the same force and effect as if the same were severally, fully and specifically set forth herein).
1. approved by the Board of Transport Commissioners for Canada Order No. T-5 dated February 1, 1965 set forth in the Canadian Freight Classification and also available at all Railway agency station and freight offices upon request, when said goods are carried by a rail carrier, or
2. of the bill of lading of the water carrier as provided in its tariff of Rules and Regulations when said good are carried by a water carrier, or
3. of the lading set forth in or prescribed by relevant tariffs, classification, statutes and regulations pertaining to motor carrier's services when said goods are carried by a motor carrier, or
4. of the Merchandise Receipt approved by the Board of Transport Commissioners for Canada by General Order No. T-33 dated February 1, 1965, and set forth in Express Classification of Canada in effect on the date and which are agreed to by the shipper and accepted for himself and his assign.

MARK WITH X

- TARP ☐
- BLIND ☐
- REGULAR ☐
- PREPAID ☐
- COLLECT ☐
- D. VAN ☐
- R. VAN ☐

WHITE - CONSIGNEE CANARY - CUSTOMER PINK - FILE GOLDENROD - FILE

AQL724

Pacific Customs Brokers Inc. (U.S.A.)

DEPARTMENT OF THE TREASURY
UNITED STATES CUSTOMS SERVICE

OMB No. 1515-0204
See back of form for Paperwork Reduction Act Notice.

NORTH AMERICAN FREE TRADE AGREEMENT
CERTIFICATE OF ORIGIN

Please print or type 19 CFR 181.11, 181.22

1. EXPORTER NAME AND ADDRESS	2. BLANKET PERIOD (DD/MM/YY)
Silhouette Steel, Ltd. 9532-194A Street Surrey, BC, V4N 4G5 TAX IDENTIFICATION NUMBER: 87735 3805 RT0001	FROM TO
3. PRODUCER NAME AND ADDRESS Silhouette Steel, Ltd. 9532-194A Street Surrey, BC, V4N 4G5 TAX IDENTIFICATION NUMBER: 877353805RT0001	4. IMPORTER NAME AND ADDRESS CH2M Hill Polar Services 9191 South Jamaica Street Englewood, CO, 80112 TAX IDENTIFICATION NUMBER: 841230545

5. DESCRIPTION OF GOOD(S)	6. HS TARIFF CLASSIFICATION NUMBER	7. PREFERENCE CRITERION	8. PRODUCER	9. NET COST	10. COUNTRY OF ORIGIN
Portable Intermodal Laboratory / 10' container - Not Trailer Mounted ****For Repair and Return****		No	Yes	No	Canada

I CERTIFY THAT:

· THE INFORMATION ON THIS DOCUMENT IS TRUE AND ACCURATE AND I ASSUME THE RESPONSIBILITY FOR PROVING SUCH REPRESENTATIONS. I UNDERSTAND THAT I AM LIABLE FOR ANY FALSE STATEMENTS OR MATERIAL OMISSIONS MADE ON OR IN CONNECTION WITH THIS DOCUMENT;

· I AGREE TO MAINTAIN, AND PRESENT UPON REQUEST, DOCUMENTATION NECESSARY TO SUPPORT THIS CERTIFICATE, AND TO INFORM, IN WRITING, ALL PERSONS TO WHOM THE CERTIFICATE WAS GIVEN OF ANY CHANGES THAT COULD AFFECT THE ACCURACY OR VALIDITY OF THIS CERTIFICATE;

· THE GOODS ORIGINATED IN THE TERRITORY OF ONE OR MORE OF THE PARTIES, AND COMPLY WITH THE ORIGIN REQUIREMENTS SPECIFIED FOR THOSE GOODS IN THE NORTH AMERICAN FREE TRADE AGREEMENT, AND UNLESS SPECIFICALLY EXEMPTED IN ARTICLE 411 OR ANNEX 401, THERE HAS BEEN NO FURTHER PRODUCTION OR ANY OTHER OPERATION OUTSIDE THE TERRITORIES OF THE PARTIES; AND

· THIS CERTIFICATE CONSISTS OF 3 PAGES, INCLUDING ALL ATTACHMENTS.

11.	11a. AUTHORIZED SIGNATURE		11b. COMPANY	
	D. de Ste Croix		Silhouette Steel, Ltd.	
	11c. NAME *(Print or type)*		11d. TITLE	
	Dave de Ste Croix		Vice President	
	11e. DATE *(DD/MM/YY)*	11f. TELEPHONE > NUMBER	*(Voice)*	*(Facsimile)*
	11/03/09		604-513-5888	604-513-8773

Customs Form 434 (040397)

PAPERWORK REDUCTION ACT NOTICE: This Information is needed to carry out the terms of the North American Free Trade Agreement (NAFTA). NAFTA requires that, upon request, an importer must provide Customs with proof of the exporter's written certification of the origin of the goods. The certification is essential to substantiate compliance with the rules of origin under the Agreement. You are required to give us this information to obtain a benefit.	The estimated average burden associated with this collection of information is 15 minutes per respondent or recordkeeper depending on individual circumstances. Comments concerning the accuracy of this burden estimate and suggestions for reducing this burden should be directed to U.S. Customs Service, Paperwork Management Branch. Washington DC 20229. *DO NOT* send completed form(s) to this office.

NORTH AMERICAN FREE TRADE AGREEMENT CERTIFICATE OF ORIGIN INSTRUCTIONS

For purposes of obtaining preferential tariff treatment, this document must be completed legibly and in full by the exporter and be in the possession of the importer at the time the declaration is made. This document may also be completed voluntarily by the producer for use by the exporter. Please print or type:

FIELD 1: State the full legal name, address (including country) and legal tax identification number of the exporter. Legal taxation number is: in Canada, employer number or importer/exporter number assigned by Revenue Canada; in Mexico, federal taxpayer's registry number (RFC); and in the United States, employer's identification number or Social Security Number.

FIELD 2: Complete field if the Certificate covers multiple shipments of identical goods as described in Field # 5 that are imported into a NAFTA country for a specified period of up to one year (the blanket period). "FROM" is the date upon which the Certificate becomes applicable to the good covered by the blanket Certificate (it may be prior to the date of signing this Certificate). "TO" is the date upon which the blanket period expires. The importation of a good for which preferential treatment is claimed based on this Certificate must occur between these dates.

FIELD 3: State the full legal name, address (including country) and legal tax identification number, as defined in Field #1, of the producer. If more than one producer's good is included on the Certificate, attach a list of additional producers, including the legal name, address (including country) and legal tax identification number, cross-referenced to the good described in Field #5. If you wish this information to be confidential, it is acceptable to state 'Available to Customs upon request'. If the producer and the exporter are the same, complete field with "SAME". If the producer is unknown, it is acceptable to state "UNKNOWN".

FIELD 4: State the full legal name, address (including country) and legal tax identification number, as defined in Field #1, of the importer. If the importer is not known, state "UNKNOWN"; if multiple importers, state "VARIOUS".

FIELD 5: Provide a full description of each good. The description should be sufficient to relate it to the invoice description and to the Harmonized System (H.S.) description of the good. If the Certificate covers a single shipment of a good, include the invoice number as shown on the commercial invoice. If not known, indicate another unique reference number, such as the shipping order number.

FIELD 6: For each good described in Field #5, identify the H.S. tariff classification to six digits. If the good is subject to a specific rule of origin in Annex 401 that requires eight digits, identify to eight digits, using the H.S. tariff classification of the country into whose territory the good is imported.

FIELD 7: For each good described in Field #5, state which criterion (A through F) is applicable. The rules of origin are contained in Chapter Four and Annex 401. Additional rules are described in Annex 703.2 (certain agricultural goods), Annex 300-B, Appendix 6 (certain textile goods) and Annex 308.1 (certain automatic data processing goods and their parts). **NOTE: In order to be entitled to preferential tariff treatment, each good must meet at least one of the criteria below.**

Preference Criteria

A.) The good is "wholly obtained or produced entirely" in the territory of one or more of the NAFTA countries as referenced in Article 415. **Note: The purchase of a good in the territory does not necessarily render it "wholly obtained or produced".** If the good is an agricultural good, see also criterion F and Annex 703.2. *(Reference: Article 401(a) and 415)*

B.) The good is produced entirely in the territory of one or more of the NAFTA countries and satisfies the specific rule of origin, set out in Annex 401, that applies to its tariff classification. The rule may include a tariff classification change, regional value-content requirement, or a combination thereof. The good must also satisfy all other applicable requirements of Chapter Four. If the good is an agricultural good, see also criterion F and Annex 703.2. *(Reference: Article 401(b))*

C.) The good is produced entirely in the territory of one or more of the NAFTA countries exclusively from originating materials. Under this criterion, one or more of the materials may not fall within the definition of "wholly produced or obtained", as set out in Article 415. All materials used in the production of the good must qualify as "originating" by meeting the rules of Article 401 (a) through (d). If the good is an agricultural good, see also criterion F and Annex 703,2. *(Reference: Article 401(c)).*

D.) Goods are produced in the territory of one or more of the NAFTA countries but do not meet the applicable rule of origin, set out in Annex 401, because certain non-originating materials do not undergo the required change in tariff classification. The goods do nonetheless meet the regional value-content requirement specified in Article 401 (d). This criterion is limited to the following two circumstances:

1. The good was imported into the territory of a NAFTA country in an unassembled or disassembled form but was classified as an assembled good, pursuant to H.S. General Rule of Interpretation 2(a), or
2. The good incorporated one or more non-originating materials, provided for as parts under the H.S., which could not undergo a change in tariff classification because the heading provided for both the good and its parts and was not further subdivided into subheadings, or the subheading provided for both the good and its parts and was not further subdivided.

NOTE: This criterion does not apply to Chapters 61 through 63 of the H.S. ***(Reference: Article 401(d))***

E.) Certain automatic data processing goods and their parts, specified in Annex 308.1, that do not originate in the territory are considered originating upon importation into the territory of a NAFTA country from the territory of another NAFTA country when the most-favored-nation tariff rate of the good conforms to the rate established in Annex 308.1 and is common to all NAFTA countries. *(Reference: Annex 308. 1)*

F.) The good is an originating agricultural good under preference criterion A, B, or C above and is not subject to a quantitative restriction in the importing NAFTA country because it is a "qualifying good" as defined in Annex 703.2, Section A or B (please specify). A good listed in Appendix 703.2B.7 is also exempt from quantitative restrictions and is eligible for NAFTA preferential tariff treatment if it meets the definition of "qualifying good" in Section A of Annex 703.2. **NOTE 1: This criterion does not apply to goods that wholly originate in Canada or the United States and are imported into either country. NOTE 2: A tariff rate quota is not a quantitative restriction.**

FIELD 8: For each good described in Field #5, state "YES" if you are the producer of the good. If you are not the producer of the good, state "NO" followed by (1), (2), or (3), depending on whether this certificate was based upon: (1) your knowledge of whether the good qualifies as an originating good; (2) your reliance on the producers written representation (other than a Certificate of Origin) that the good qualifies as an originating good; or (3) a completed and signed Certificate for the good, voluntarily provided to the exporter by the producer.

FIELD 9: For each good described in field #5, where the good is subject to a regional value content (RVC) requirement, indicate "NC" if the RVC is calculated according to the net cost method; otherwise, indicate "NO". If the RVC is calculated over a period of time, further identity the beginning and ending dates (DD/MM/YY) of that period. *(Reference: Articles 402.1, 402.5).*

FIELD 10: Identify the name of the country ("MX" or "US" for agricultural and textile goods exported to Canada; "US" or "CA" for all goods exported to Mexico; or "CA" or "MX" for all goods exported to the United States) to which the preferential rate of customs duty applies, as set out in Annex 302.2, in accordance with the Marking Rules or in each party's schedule of tariff elimination.

For all other originating goods exported to Canada, indicate appropriately "MX" or "US" if the goods originate in that NAFTA country, within the meaning of the NAFTA Rules of Origin Regulations, and any subsequent processing in the other NAFTA country does not increase the transaction value of the goods by more than seven percent; otherwise "JNT" for joint production. *(Reference: Annex 302.2)*

FIELD 11: This field must be completed, signed, and dated by the exporter. When the Certificate is completed by the producer for use by the exporter it must be completed, signed, and dated by the producer. The date must be the date the Certificate was completed and signed.

Packing Slip

Silhouette Steel Ltd.
9532-194A Street
Surrey, B.C.
V4N 4G5
PHONE 604-513-5888
FAX 604-513-8773

Date Thursday, March 12th / 2009

Bill To	Ship To
CH2m Hill Polar Services 9191 South Jamaica Street Englewood, Colorado 80112	Skidaway Institute of Oceanography 10 Ocean Science Circle Savannah, Georgia 31411 Attention James Sanders (912-598-3340)

P.O.	Terms	Rep	Ship	Via	F.O.B.	Project
ARC-0520837	COD	Dave	11 March 2009	Motrux	Silhouette Steel	4009-01

Quantity	Item	Description	Price each	Amount
1		10' Aluminum Isotope Lab Van		
2		Set Keys, TrioVing (in Envelope with Driver)		

AQL724

Pacific Customs Brokers Inc. (U.S.A.)

Pacific Customs Brokers Inc. (USA) - NAFTA Certificate

Please complete the following contact information. Submissions received through our FormLink system will be accepted as final documents and posted to our Brokerage Services. Any questions should be directed to our support group at formlink@pcb.ca for assistance.

Company Name:	Silhouette Steel, Ltd.	Postal/Zip Code:	V4N 4G5
Contact Name:	Dave de Ste Croix	Phone Number:	604-513-5888
Address:	9532-194A Street	Fax Number:	604-513-8773
City:	Surrey	E-Mail Address:	dave@silhouettesteel.com
State/Province:	B.C.		

Comments/Special Instructions:

Pacific Customs Brokers Inc. (USA)
P.O. Box: 4505
Blaine, WA 98231-4505
Phone: (360) 332-8534
Fax: (360) 332-3253
Toll Free: 1-877-332-8534
E-Mail: info@pcbusa.com

FormLink, Copyright 2002
Frontier Communications Inc.
Document Revision, 11/6/02

dave@silhouettesteel.com

RAD VAN DELIVERY TIME FROM 1/7/03
HEIGHT - 8'6" 6-8 WKS.

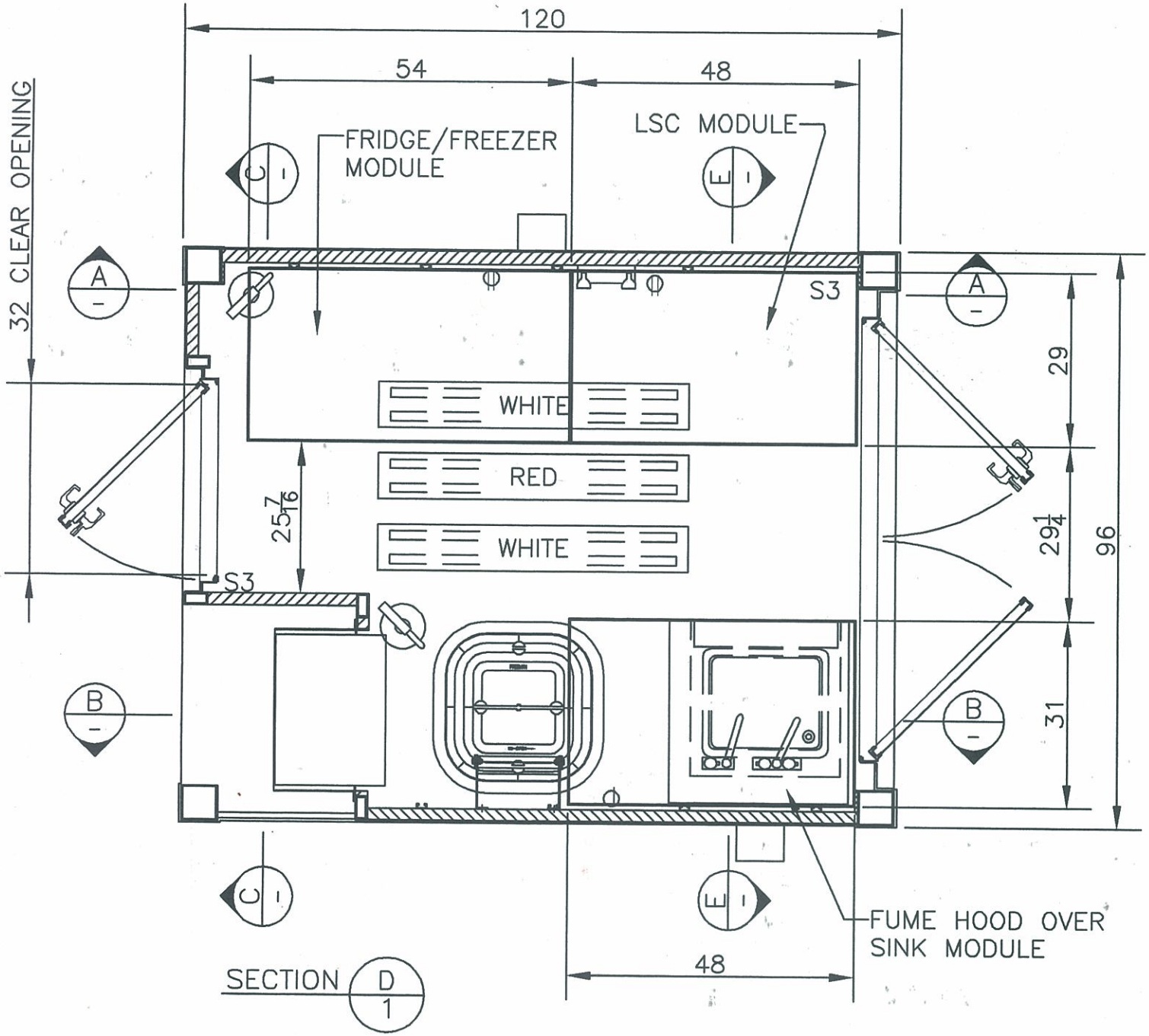

RAD VAN DELIVERY TIME FROM 1/7/03
HEIGHT - 8'6" 6-8 WKS.

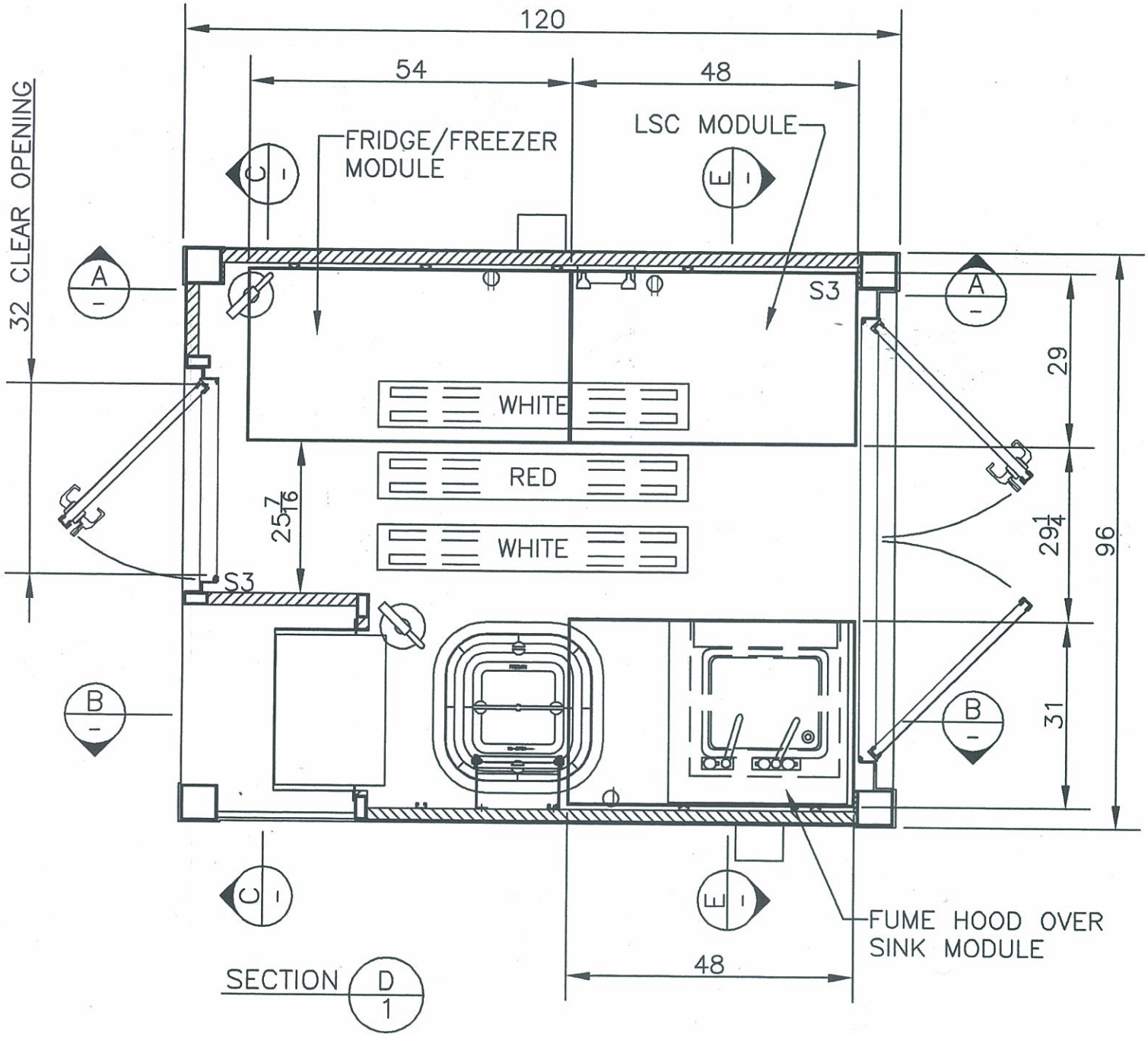

RAD VAN DELIVERY TIME FROM 1/7/03
HEIGHT - 8'6" 6-8 WKS.

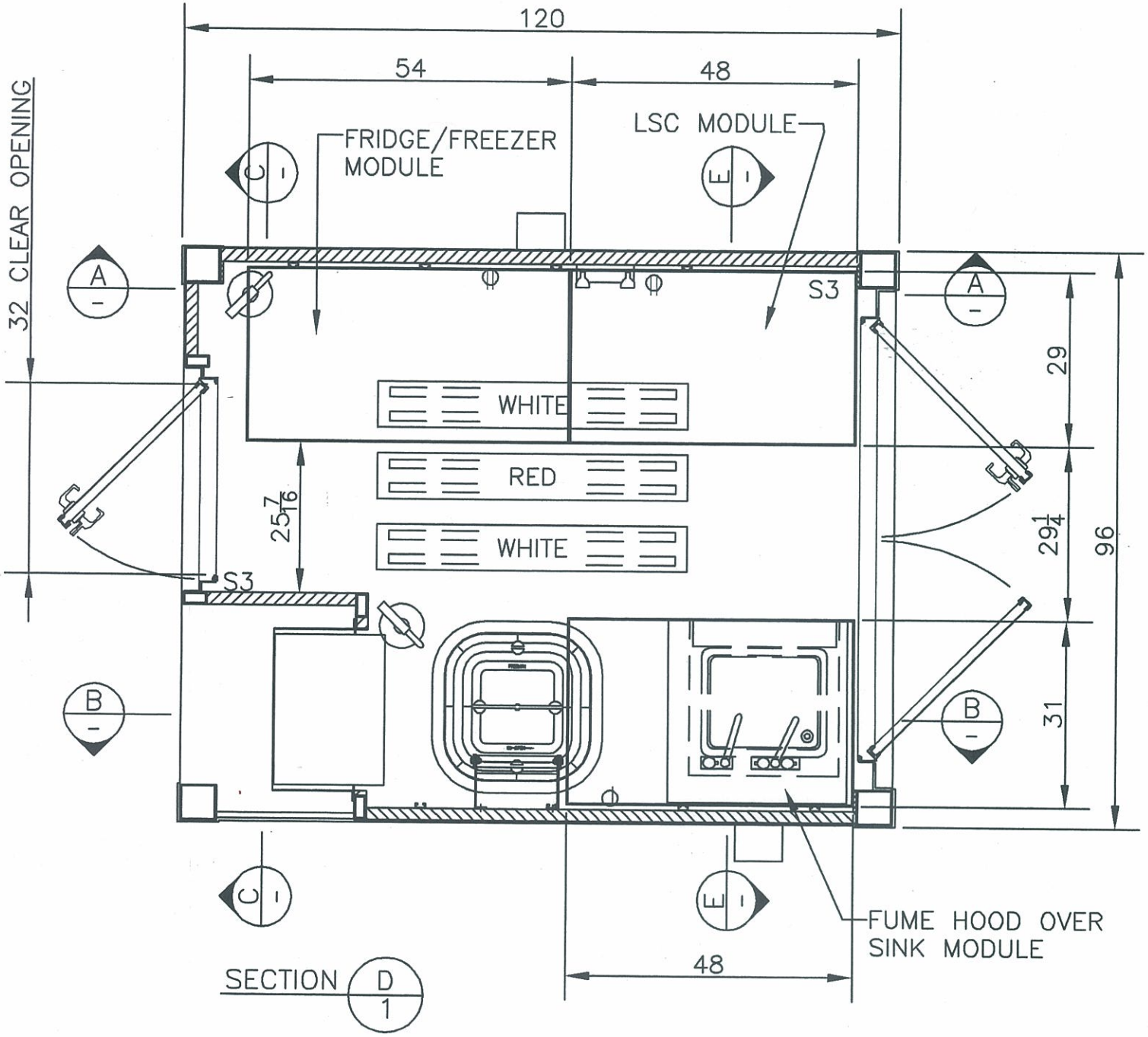

VAN ELECTRICAL PROCEEDURE
3-Phase – Variable Voltage

Connection to "Shore" Power or 208V "Ship" Power:

1. Plug female end of power cable into van outlet marked "208V Ship/Shore" power.
2. Ensure main breaker and individual breakers in distribution panel are in 'off' position.
3. Set the transfer switch in the van to the "Shore" position.
4. Supply suitable male plug on end of van power cable and plug into supply circuit.
5. Energize circuit. Verify incoming voltage as 208-240 V.
6. Energize main and individual breakers in distribution panel. Verify correct operation of lights, HVAC, GFCI receptacles.
7. Set the emergency light switch in the "Normal" mode and verify operation.

Connection to 240 or 480 "Ship" Power:

1. Plug female end of van power cable into outlet marked "Ship Power".
2. ENSURE CIRCUIT IS NOT ENERGIZED and install the appropriate fuses in the fused disconnect:
   480 V = 30 A
   240 V = 40 A
   208 V = 60 A
3. Set the voltage selector switch in the van to the appropriate incoming voltage.
4. Supply suitable male plug on end of van power cable and plug into supply circuit
5. Ensure main breaker and individual breakers in distribution panel are in 'off' position.
6. Energize circuit. Verify incoming voltage matches selector switch.
7. Close the disconnect cover and switch "ON."
8. Set the transfer switch in the van to the "Ship" position.
9. Energize main and individual breakers in distribution panel. Verify the correct operation of lights, HVAC, GFCI receptacles.
10. Set Emergency Light switch in the "Normal" mode and verify operation.

Disconnecting:

1. Put the emergency light switch in the "Off" position.
2. Turn off all circuit breakers in the distribution panel including the main breaker.
3. Turn off the power source.
4. Unplug and remove male plug from the cable as required. Place the cover over the van-mounted receptacle.

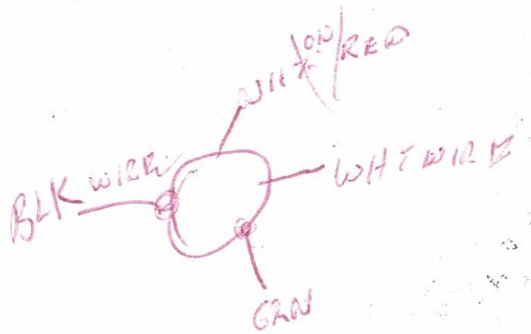

IN-7900
April 2001

Buck and Boost Dry-Type Transformers

UL LISTED

Indoor / Outdoor

Instructions for the Selection, Safe Handling, Installation and Operation of Buck and Boost Dry-Type Transformers

How to Select the Proper Transformer

To select the proper transformer for Buck-Boost applications, determine:

1. **Input line voltage -** The voltage that you want to buck (decrease) or boost (increase). This can be found by measuring the supply line voltage with a voltmeter.
2. **Load voltage -** The voltage at which your equipment is designed to operate. This is listed on the nameplate of the load equipment.
3. **Load KVA or Load Amps -** You do not need to know both - one or the other is sufficient for selection purposes. This information usually can be found on the nameplate of the equipment that you want to operate.
4. **Number of phases -** Single or three phase line and load should match because a transformer is not capable of converting single to three phase. It is, however, a common application to make a single phase transformer connection from a three phase supply by use of one leg of the three phase supply circuit. Care must always be taken not to overload the leg of the three-phase supply. This is particularly true in a Buck-Boost application because the supply must provide for the load KVA, not just the nameplate rating of the Buck-Boost transformer.
5. **Frequency -** The supply line frequency must be the same as the frequency of the equipment to be operated - either 50 or 60 cycles.

How to Use Selection Charts

1. **Choose the selection table** with the correct number of phases. Tables I, III and V for single phase and Tables II, IV and VI for three phase transformers. Tables I and II are for 120 x 240 - 12/24 volts, tables III and IV are for 120 x 240 - 16/32 volts and tables V and VI are for 240 x 480 - 24/48 volts.
2. **Line/Load voltage combinations** are listed across the top of the selection table. Select a line/load voltage combination which comes closest to matching your application.
3. **Follow the selected column** down until you find either the load KVA or load amps of your application. If you do not find the exact value, go on to the next highest rating.
4. **Now follow across the table** to the far left-hand side to find the KVA of the transformer you need.
5. **Follow the column of your line/load voltage** to the bottom to find the connection diagram for this application. NOTE: Connection diagrams show low voltage and high voltage connection terminals. Either can be input or output depending on buck or boost application.
6. **In the case of three phase loads** either two or three single phase transformers are required as indicated in the "quantity required" line at the bottom of Table II, IV or VI. The selection is dependent on whether a Wye connected bank of three transformers with a neutral is required or whether an open Delta connected bank of two transformers for a Delta connected load will be suitable. Wye connected banks should be used with 3-phase, 4 wire supplies only.

For line/load voltages not listed on table, use the pair listed on the table that is slightly above your application for reference. Then apply the first formula at the bottom of Table II, IV or VI to determine "New" output voltage. The new KVA rating can be found using the second formula.

Operating and Installation Instructions for Encapsulated Dry-Type Transformers

General

The encapsulated dry-type transformer is a totally enclosed, non-ventilated, compound filled, insulating transformer which has been completely assembled at the factory and is ready for operation. These transformers are completely encased in a sturdy steel housing. A large wiring compartment with conduit knockouts permits fast wiring connections. This wiring compartment is accessible by a removable cover.

Inspection

The transformer should be unpacked as soon as it is received and examined for possible damage during shipment. Should damage be found, a claim should be filed immediately with the transportation company.

Handling

Care should be exercised in handling dry-type transformers. Lifting eyes or similar lifting means are provided on most sizes.

Installation

These encapsulated dry-type transformers are UL listed for indoor/outdoor applications. They may be installed on walls, beams, platforms, or other locations. They are ideal for applications in dusty industrial areas. Dry-type transformers must be protected by lightning arresters or other suitable equipment from outside lines which may cause lightning and switching surges to be transmitted to the transformer. The enclosure should be grounded to a water pipe or similar type of effective common ground. Transformers should not be loaded beyond their nameplate rating since overloads will result in a reduced life expectancy.

Connections

Refer to the nameplate for voltage combinations, frequency, number of phases, and tap connections. All leads not being used must be properly insulated.

Maintenance

Practically no maintenance is required on a dry-type transformer. Encapsulated types only require wiping off dust or dirt from the outside of the case.

Typical Three-Phase Buck-Boost Autotransformer Installation

Use quantity of Buck-Boost Transformer(s) indicated on chart for connection to be made. Quantity required may vary from quantity shown in this illustration.

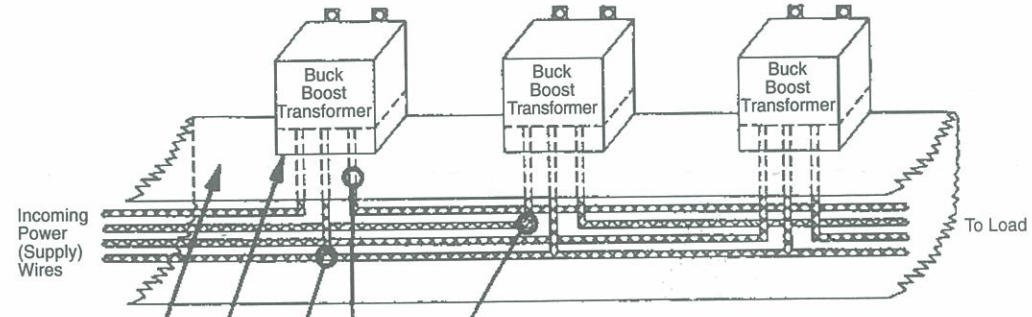

90° Connectors may be used to save bending room. (See N.E.C.)

Transformer lead (terminal) wires. Not all leads are shown.

"T" Connectors may be used to save bending room. (See N.E.C.)

Bottom cover of transformer is not used. A hole is cut at the time of installation in the wiring trough or box to match the opening in the bottom of the transformer.

Wiring trough or box (not supplied with the transformer(s). Available from electrical supply houses. Wiring trough or box cover is shown.

Buck-Boost Connection Diagram

Use the following information for single-phase autotransformer connections.
NOTE: Inputs and outputs may be reversed; KVA capacity **remains constant.** All applications are suitable for 60 Hz. only.
IMPORTANT: Refer to the N.E.C. (National Electrical Code) **Article 450-4** for overcurrent protection of an autotransformer.

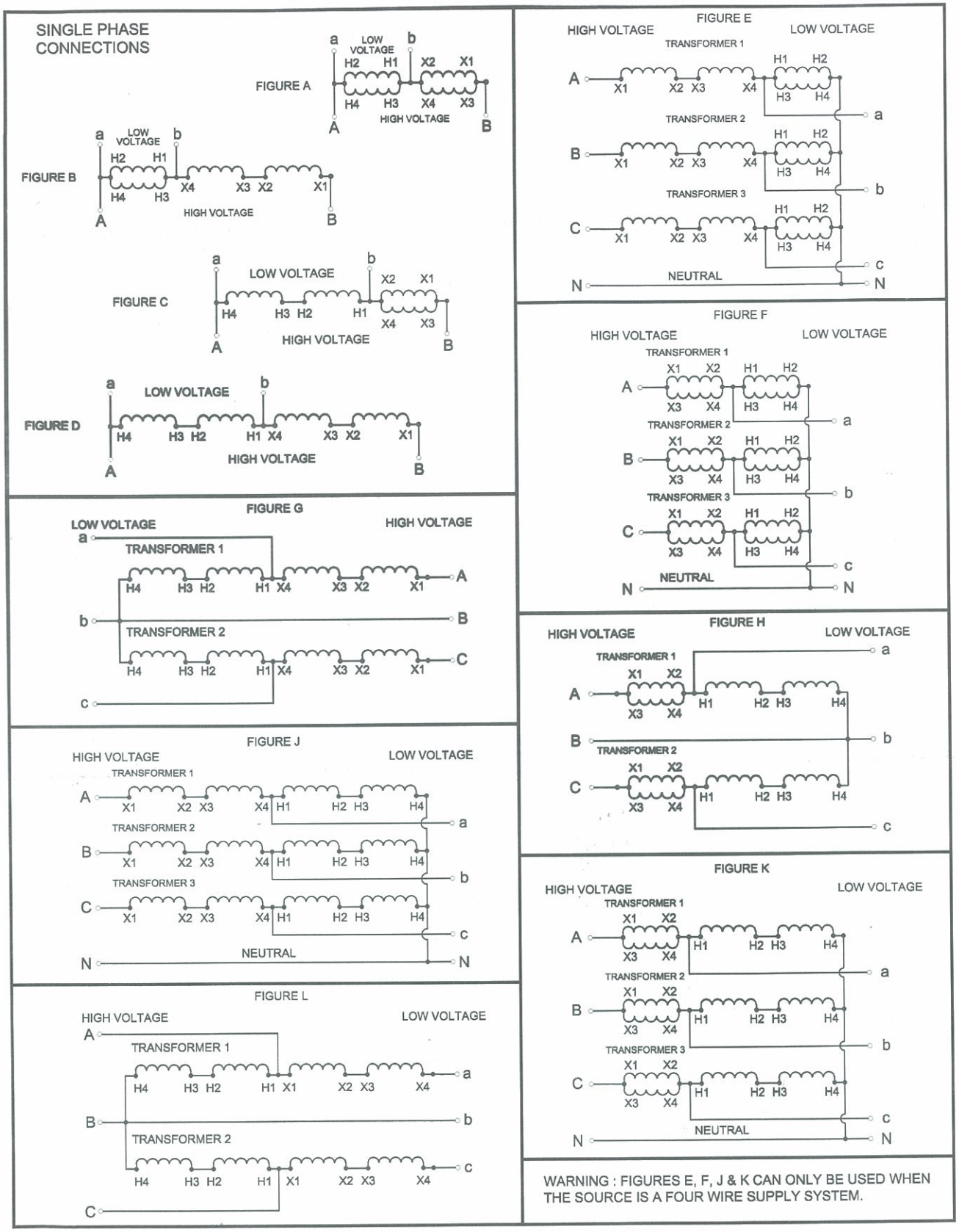

120 x 240 Volts Primary - 12/24 Volts Secondary

Table I — SINGLE PHASE

		BOOSTING								BUCKING					
	Line Voltage	96	100	105	109	189	208	218	220	125	132	229	245	250	252
	Load Voltage	115	120	116	120	208	229	240	242	114	120	208	223	227	240
0.05 KVA	KVA	0.24	0.25	0.48	0.50	0.43	0.48	0.50	0.50	0.52	0.55	0.48	0.51	0.52	1.05
	AMPS	2.08	2.08	4.17	4.17	2.08	2.08	2.08	2.08	4.58	4.58	2.29	2.29	2.29	4.38
	FUSE**	4*	4*	6	6	3	3	3	3	6	6	3	3	3	6
0.075 KVA	KVA	0.36	0.38	0.72	0.75	0.65	0.72	0.75	0.76	0.78	0.83	0.72	0.77	0.78	1.58
	AMPS	3.13	3.12	6.25	6.25	3.12	3.13	3.13	3.13	6.87	6.88	3.44	3.44	3.44	6.56
	FUSE**	6	6	10	10	5*	5*	5*	5*	10	10	5*	5*	5*	10
0.1 KVA	KVA	0.48	0.50	0.96	1.00	0.87	0.95	1.00	1.01	1.04	1.10	0.95	1.02	1.04	2.10
	AMPS	4.17	4.17	8.33	8.33	4.17	4.17	4.17	4.17	9.17	9.17	4.58	4.58	4.58	8.75
	FUSE**	8*	8*	15	15	6	6	6	6	12*	12*	6	6	6	12*
0.15 KVA	KVA	0.72	0.75	1.44	1.50	1.30	1.43	1.50	1.51	1.56	1.65	1.43	1.53	1.56	3.15
	AMPS	6.25	6.25	12.50	12.50	6.25	6.25	6.25	6.25	13.75	13.75	6.87	6.87	6.87	13.13
	FUSE**	10	10	20	20	10	10	10	10	20	20	10	10	10	20
0.25 KVA	KVA	1.20	1.25	2.41	2.50	2.17	2.38	2.50	2.52	2.60	2.75	2.39	2.55	2.60	5.25
	AMPS	10.42	10.42	20.83	20.83	10.42	10.42	10.42	10.42	22.92	22.92	11.46	11.46	11.46	21.88
	FUSE**	20	20	30	30	15	15	15	15	30	30	15	15	15	30
0.5 KVA	KVA	2.40	2.50	4.81	5.00	4.33	4.77	5.00	5.04	5.21	5.50	4.77	5.10	5.21	10.50
	AMPS	20.83	20.83	41.67	41.67	20.83	20.83	20,83	20.83	45.83	45.83	22.92	22.92	22.92	43.75
	FUSE**	35	35	60	60	30	30	30	30	60	60	30	30	30	60
0.75 KVA	KVA	3.60	3.75	7.22	7.49	6.50	7.15	7.49	7.56	7.81	8.25	7.16	7.66	7.81	15.75
	AMPS	31.25	31.25	62.50	62.50	31.25	31.25	31.25	31.25	68.75	68.75	34.37	34.37	34.37	65.63
	FUSE**	50	50	90	90	45	45	45	45	80	80	40	40	40	80
1 KVA	KVA	4.80	5.00	9.63	9.99	8.66	9.53	9.99	10.08	10.42	11.00	9.54	10.21	10.42	21.00
	AMPS	41.67	41.67	83.33	8.33	41.67	41.67	41.67	41.67	91.67	91.67	45.83	45.83	45.83	87.50
	FUSE**	70	70	125	125	60	60	60	60	110	110	60	60	60	110
1.5 KVA	KVA	7.20	7.50	14.44	14.99	12.99	14.30	14.99	15.13	15.62	16.50	14.31	15.31	15.62	31.50
	AMPS	62.50	62.50	125.00	125.00	62.50	62.50	62.50	62.50	137.50	137.50	68.75	68.75	68.75	131.25
	FUSE**	100	100	175	175	90	90	90	90	175	175	80	80	80	175
2 KVA	KVA	9.60	10.00	19.25	19.98	17.32	19.07	19.98	20.17	20.83	22.00	19.08	20.42	20.83	42.00
	AMPS	83.33	83.33	166.67	166.67	83.33	83.33	83.33	83.33	183.33	183.33	91.67	91.67	91.67	175.00
	FUSE**	125	125	250	250	125	125	125	125	225	225	110	110	110	225
3 KVA	KVA	14.40	15.00	28.88	29.98	25.99	28.60	29.98	30.25	31.25	33.00	28.62	30.62	31.25	63.00
	AMPS	125.00	125.00	250.00	250.00	125.00	125.00	125.00	125.00	275.00	275.00	137.50	137.50	137.50	262.50
	FUSE**	200	200	350	350	175	175	175	175	350	350	175	175	175	350
5 KVA	KVA	24.00	25.00	48.13	49.96	43.31	47.67	49.96	50.42	52.08	55.00	47.71	51.04	52.08	105.00
	AMPS	208.33	208.33	416.67	416.67	208.33	208.33	208.33	208.33	458.33	458.33	229.17	229.17	229.17	437.50
	FUSE**	350	350	600	600	300	300	300	300	600	600	300	300	300	600
	DIAGRAM	B	B	A	A	D	D	D	D	A	A	D	D	D	C

*Non NEC standard fuse size (NEC 240-6), check with local authorities for use of next larger standard size.
**Maximum fuse or circuit breaker size per NEC 450-4.

Table II — THREE PHASE

		BOOSTING									BUCKING				
	Line Voltage	189Y/109	195Y/113	200Y/115	208Y/120	416Y/240	416Y/240	189	208	220	218	229	250	255	264
	Load Voltage	208Y/120	234Y/135	240Y/139	229Y/132	458Y/264	437Y/252	208	229	242	208	208	227	232	240
0.05 KVA	KVA	1.50	0.84	0.87	1.65	1.65	3.15	0.75	0.83	0.87	1.57	0.83	0.90	0.92	0.95
	AMPS	4.17	2.08	2.08	4.17	2.08	4.17	2.08	2.08	2.08	4.38	2.29	2.29	2.29	2.29
	FUSE**	6	4*	4*	6	3	6	3	3	6.00	6	3	3	3	3
0.075 KVA	KVA	2.25	1.27	1.30	2.48	2.48	4.73	1.13	1.24	1.31	2.36	1.24	1.35	1.38	1.43
	AMPS	6.25	3.12	3.12	6.25	3.13	6.25	3.12	3.13	3.13	6.56	3.44	3.44	3.44	3.44
	FUSE**	10	6	6	10	5*	10	5*	5*	5*	10	5*	5*	5*	5*
0.1 KVA	KVA	3.00	1.69	1.73	3.30	3.30	6.30	1.50	1.65	1.75	3.15	1.65	1.80	1.84	1.91
	AMPS	8.33	4.17	4.17	8.33	4.17	8.33	4.17	4.17	4.17	8.75	4.58	4.58	4.58	4.58
	FUSE**	15	8*	8*	15	6	12*	6	6	6	12*	6	6	6	6
0.15 KVA	KVA	4.50	2.53	2.60	4.95	4.95	9.46	2.25	2.48	2.62	4.72	2.48	2.71	2.76	2.86
	AMPS	12.50	6.25	6.25	12.50	6.25	12.50	6.25	6.25	6.25	13.13	6.87	6.87	6.88	6.88
	FUSE**	20	10	10	20	10	20	10	10	10	20	10	10	10	10
0.25 KVA	KVA	7.50	4.22	4.33	8.26	8.26	15.76	3.75	4.13	4.37	7.87	4.13	4.51	4.60	4.76
	AMPS	20.83	10.42	10.42	20.83	10.42	20.83	10.42	10.42	10.42	21.88	11.46	11.46	11.46	11.46
	FUSE**	30	20	20	30	15	30	15	15	15	30	15	15	15	15
0.5 KVA	KVA	15.00	8.44	8.66	16.51	16.51	31.52	7.50	8.26	8.73	15.73	8.26	9.02	9.20	9.53
	AMPS	41.67	20.83	20.83	41.67	20.83	41.67	20.83	20.83	20.83	43.75	22.92	22.92	22.92	22.92
	FUSE**	60	35	35	60	30	60	30	30	30	60	30	30	30	30
0.75 KVA	KVA	22.51	12.67	12.99	24.77	24.77	47.28	11.25	12.38	13.10	23.60	12.39	13.53	13.80	14.29
	AMPS	62.50	31.25	31.25	62.50	31.25	62.50	31.25	31.25	31.25	65.63	34.37	34.37	34.37	34.38
	FUSE**	90	50	50	90	45	90	45	45	45	80	40	40	40	40
1 KVA	KVA	30.01	16.89	17.32	33.02	33.02	63.05	15.00	16.51	17.46	31.47	16.53	18.04	18.40	19.05
	AMPS	83.33	41.67	41.67	83.33	41.67	83.33	41.67	41.67	41.67	87.50	45.83	45.83	45.83	45.83
	FUSE**	125	70	70	125	60	110	60	60	60	110	60	60	60	60
1.5 KVA	KVA	45.01	25.33	25.98	49.54	49.54	94.57	22.51	24.77	26.20	47.20	24.79	27.06	27.60	28.58
	AMPS	125.00	62.50	62.50	125.00	62.50	125.00	62.50	62.50	62.50	131.25	68.75	68.75	68.75	68.75
	FUSE**	175	100	100	175	90	175	90	90	90	175	80	80	80	80
2 KVA	KVA	60.02	33.77	34.64	66.05	66.05	126.09	30.01	33.02	34.93	62.93	33.05	36.08	36.81	38.11
	AMPS	166.67	83.33	83.33	166.67	83.33	166.67	83.33	83.33	83.33	175.00	91.67	91.67	91.67	91.67
	FUSE**	250	125	125	250	125	225	125	125	125	225	110	110	110	110
3 KVA	KVA	90.02	50.66	51.96	99.07	99.07	189.14	45.01	49.54	52.39	94.40	49.58	54.13	55.21	57.16
	AMPS	250.00	125.00	125.00	250.00	125.00	250.00	125.00	125.00	125.00	262.50	137.50	137.50	137.50	137.50
	FUSE**	350	200	200	350	175	350	175	175	175	350	175	175	175	175
5 KVA	KVA	150.04	84.44	86.60	165.12	165.12	315.23	75.02	82.56	87.32	157.33	82.63	90.21	92.02	95.26
	AMPS	416.67	208.33	208.33	416.67	208.33	416.67	208.33	208.33	208.33	437.50	229.17	229.17	229.17	229.17
	FUSE**	600	350	350	600	300	600	300	300	300	600	300	300	300	300
	Number of Transformers	3	3	3	3	3	3	2	2	2	2	2	2	2	2
	DIAGRAM	F	E	E	F	J	K	G	G	G	H	G	G	G	G

*Non NEC standard fuse size (NEC 240-6), check with local authorities for use of next larger standard size.
**Maximum fuse or circuit breaker size per NEC 450-4.

Output voltage for lower input voltage can be found by: $\frac{\text{Rated Output Voltage}}{\text{Rated Input Voltage}}$ x Input Actual Voltage = Output New Voltage.

Output KVA available at reduced input voltage can be found by: $\frac{\text{Actual Intput Voltage}}{\text{Rated Input Voltage}}$ x Output KVA = New KVA Rating.

120 x 240 Volts Primary - 16/32 Volts Secondary

Table III — SINGLE PHASE

		BOOSTING								BUCKING					
	Line Voltage	95	100	105	208	215	215	220	225	135	240	240	245	250	255
	Load Voltage	120	113	119	236	244	229	235	240	120	212	225	230	234	239
0.05 KVA	KVA	0.19	0.35	0.37	0.37	0.38	0.72	0.73	0.75	0.42	0.38	0.75	0.77	0.78	0.80
	AMPS	1.56	3.13	3.13	1.56	1.56	3.12	3.13	3.12	3.54	1.77	3.33	3.33	3.33	3.33
	FUSE**	3	5*	5*	2.5*	2.5*	5*	5*	5*	5*	2.5*	5*	5*	5*	5*
0.075 KVA	KVA	0.28	0.53	0.56	0.55	0.57	1.07	1.10	1.12	0.63	0.56	1.12	1.15	1.17	1.20
	AMPS	2.34	4.69	4.69	2.34	2.34	4.69	4.69	4.69	5.31	2.66	5.00	5.00	5.00	5.00
	FUSE**	4*	8*	8*	4*	4*	8*	8*	8*	6	3	6	6	6	6
0.1 KVA	KVA	0.38	0.71	0.74	0.74	0.76	1.43	1.47	1.50	0.84	0.75	1.50	1.53	1.56	1.59
	AMPS	3.13	6.25	6.25	3.13	3.13	6.25	6.25	6.25	7.08	3.54	6.67	6.67	6.67	6.67
	FUSE**	6	10	10	5*	5*	10	10	10	10	5*	10	10	10	10
0.15 KVA	KVA	0.56	1.06	1.12	1.11	1.14	2.15	2.20	2.25	1.27	1.13	2.25	2.30	2.34	2.39
	AMPS	4.69	9.38	9.38	4.69	4.69	9.37	9.37	9.37	10.63	5.31	10.00	10.00	10.00	10.00
	FUSE**	8*	15	15	8*	8*	15	15	15	15	6	15	15	15	15
0.25 KVA	KVA	0.94	1.77	1.86	1.84	1.90	3.58	3.67	3.75	2.11	1.88	3.75	3.83	3.91	3.98
	AMPS	7.81	15.63	15.63	7.81	7.81	15.62	15.62	15.62	17.71	8.85	16.67	16.67	16.67	16.67
	FUSE**	15	25	25	12*	12*	25	25	25	20	10	20	20	20	20
0.5 KVA	KVA	1.88	3.54	3.72	3.68	3.81	7.17	7.33	7.50	4.22	3.75	7.50	7.66	7.81	7.97
	AMPS	15.63	31.25	31.25	15.63	15.63	31.25	31.25	31.25	35.42	17.71	33.33	33.33	33.33	33.33
	FUSE**	25	45	45	25	25	45	45	45	40	20	40	40	40	40
0.75 KVA	KVA	2.82	5.31	5.58	5.53	5.71	10.75	11.00	11.25	6.33	5.63	11.25	11.48	11.72	11.95
	AMPS	23.44	46.88	46.88	23.44	23.44	46.87	46.87	46.87	53.13	26.56	50.00	50.00	50.00	50.00
	FUSE**	40	70	70	35	35	70	70	70	60	30	60	60	60	60
1 KVA	KVA	3.76	7.08	7.44	7.37	7.61	14.33	14.67	15.00	8.44	7.50	15.00	15.31	15.62	15.94
	AMPS	31.25	62.50	62.50	31.25	31.25	62.50	62.50	62.50	70.83	35.42	66.67	66.67	66.67	66.67
	FUSE**	50	90	90	45	45	90	90	90	80	40	80	80	80	80
1.5 KVA	KVA	5.64	10.63	11.16	11.05	11.42	21.50	22.00	22.50	12.66	11.25	22.50	22.97	23.44	23.91
	AMPS	46.88	93.75	93.75	46.88	46.88	93.75	93.75	93.75	106.25	53.13	100.00	100.00	100.00	100.00
	FUSE**	80	150	150	70	70	125	125	125	125	60	125	125	125	125
2 KVA	KVA	7.52	14.71	14.88	14.73	15.23	28.67	29.33	30.00	16.88	15.00	30.00	30.62	31.25	31.87
	AMPS	62.50	125.00	125.00	62.50	62.50	125.00	125.00	125.00	141.67	70.83	133.33	133.33	133.33	133.33
	FUSE**	100	200	200	90	90	175	175	175	175	80	175	175	175	175
3 KVA	KVA	11.28	21.25	22.31	22.10	22.84	43.00	44.00	45.00	25.31	22.50	45.00	45.94	46.87	47.81
	AMPS	93.75	187.50	187.50	93.75	93.75	187.50	187.50	187.50	212.50	106.25	200.00	200.00	200.00	200.00
	FUSE**	150	300	300	150	150	250	250	250	250	125	250	250	250	250
5 KVA	KVA	18.80	35.42	37.19	36.83	38.07	71.67	73.33	75.00	42.19	37.50	75.00	76.56	78.12	79.69
	AMPS	156.25	312.5	312.50	156.25	156.25	312.50	312.50	312.50	354.17	177.08	333.33	333.33	333.33	333.33
	FUSE**	250	450	450	225	225	450	450	450	400	200	400	400	400	400
	DIAGRAM	B	A	A	D	D	C	C	C	A	D	C	C	C	C

*Non NEC standard fuse size (NEC 240-6), check with local authorities for use of next larger standard size.
**Maximum fuse or circuit breaker size per NEC 450-4.

Table IV— THREE PHASE

		BOOSTING					BUCKING					
	Line Voltage	183Y/106	208Y/120	195	208	225	240	245	250	256	265	272
	Load Voltage	208Y/120	236Y/136	208	236	240	208	230	234	240	234	240
0.05 KVA	KVA	1.12	1.28	1.13	0.64	1.30	0.65	1.33	1.35	1.39	0.72	0.74
	AMPS	3.13	3.13	3.12	1.56	3.12	1.80	3.33	3.33	3.33	1.77	1.77
	FUSE**	5*	5*	5*	2.5*	5*	2.5*	5*	5*	5*	2.5*	2.5*
0.075 KVA	KVA	1.68	1.91	1.69	0.96	1.95	0.97	1.99	2.03	2.08	1.08	1.10
	AMPS	4.69	4.69	4.69	2.34	4.69	2.70	5.00	5.00	5.00	2.66	2.66
	FUSE**	8*	8*	8*	4*	8*	3	6	6	6	3	3
0.1 KVA	KVA	2.25	2.55	2.25	1.28	2.60	1.30	2.65	2.71	2.77	1.43	1.47
	AMPS	6.25	6.25	6.25	3.13	6.25	3.61	6.67	6.67	6.67	3.54	3.54
	FUSE**	10	10	10	5*	10	5*	10	10	10	5*	5*
0.15 KVA	KVA	3.37	3.83	3.38	1.91	3.90	1.95	3.98	4.06	4.16	2.15	2.21
	AMPS	9.38	9.38	9.37	4.69	9.37	5.41	10.00	10.00	10.00	5.31	5.31
	FUSE**	15	15	15	8*	15	6	15	15	15	6	6
0.25 KVA	KVA	5.61	6.38	5.63	3.19	6.50	3.25	6.63	6.77	6.93	3.59	3.68
	AMPS	15.63	15.62	15.62	7.81	15.62	9.01	16.67	16.67	16.67	8.85	8.85
	FUSE**	25	25	25	12*	25	10	20	20	20	10	10
0.5 KVA	KVA	11.23	12.76	11.26	6.38	12.99	6.50	13.26	13.53	13.86	7.17	7.36
	AMPS	31.25	31.25	31.25	15.63	31.25	18.03	33.33	33.33	33.33	17.71	17.71
	FUSE**	45	45	45	25	45	20	40	40	40	20	20
0.75 KVA	KVA	16.84	19.14	16.89	9.58	19.49	9.74	19.89	20.30	20.78	10.76	11.04
	AMPS	46.88	46.88	46.87	23.44	46.87	27.04	50.00	50.00	50.00	26.56	26.56
	FUSE**	70	70	70	35	70	30	60	60	60	30	30
1 KVA	KVA	22.45	25.52	22.52	12.76	25.98	12.99	26.52	27.06	27.71	14.34	14.72
	AMPS	62.50	62.50	62.50	31.25	62.50	36.06	66.67	66.67	66.67	35.42	35.42
	FUSE**	90	90	90	45	90	40	80	80	80	40	40
1.5 KVA	KVA	33.68	38.28	33.77	19.14	38.97	19.49	39.78	40.59	41.57	21.52	22.08
	AMPS	93.75	93.75	93.75	46.88	93.75	54.09	100.00	100.00	100.00	53.13	53.13
	FUSE**	150	150	125	70	125	60	125	125	125	60	60
2 KVA	KVA	44.90	51.04	45.03	25.52	51.96	25.98	53.04	54.13	55.43	28.69	29.44
	AMPS	125.00	125.00	125.00	62.50	125.00	72.12	133.33	133.33	133.33	70.83	70.83
	FUSE**	200	200	175	90	175	80	175	175	175	80	80
3 KVA	KVA	67.36	76.56	67.55	38.28	77.94	38.97	79.57	81.19	83.14	43.03	44.17
	AMPS	187.50	187.50	187.50	93.75	187.50	108.17	200.00	200.00	200.00	106.25	106.25
	FUSE**	300	300	250	150	250	125	250	250	250	125	125
5 KVA	KVA	112.26	127.59	112.58	63.80	129.90	64.95	132.61	135.32	138.56	71.72	73.61
	AMPS	312.50	312.50	312.50	156.25	312.50	180.29	333.33	333.33	333.33	177.08	177.08
	FUSE**	450	450	450	225	450	200	400	400	400	200	200
	Number of Transformers	3	3	2	2	2	2	2	2	2	2	2
	DIAGRAM	F	F	H	G	H	L	H	H	H	G	G

*Non NEC standard fuse size (NEC 240-6), check with local authorities for use of next larger standard size.
**Maximum fuse or circuit breaker size per NEC 450-4.

Output voltage for lower input voltage can be found by: $\frac{\text{Rated Output Voltage}}{\text{Rated Input Voltage}}$ x Input Actual Voltage = Output New Voltage.

Output KVA available at reduced input voltage can be found by: $\frac{\text{Actual Intput Voltage}}{\text{Rated Input Voltage}}$ x Output KVA = New KVA Rating.

240 x 480 Volts Primary - 24/48 Volts Secondary

Table V — SINGLE PHASE

		BOOSTING									BUCKING				
	Line Voltage	230	380	416	425	430	435	440	450	460	132	277	480	480	504
	Load Voltage	276	418	458	468	473	457	462	495	483	126	231	436	457	480
0.05 KVA	KVA	0.29	0.44	0.48	0.49	0.49	0.95	0.96	0.52	1.01	0.28	0.29	0.50	1.00	1.05
	AMPS	1.04	1.04	1.04	1.04	1.04	2.08	2.08	1.04	2.08	2.19	1.25	1.15	2.19	2.19
	FUSE**	2*	1.5*	1.5*	1.5*	1.5*	3	3	1.5*	3	3	1.5*	1.5*	3	3
0.075 KVA	KVA	0.43	0.65	0.72	0.73	0.74	1.43	1.44	0.77	1.51	0.41	0.43	0.75	1.50	1.58
	AMPS	1.56	1.56	1.56	1.56	1.56	3.13	3.13	1.56	3.13	3.28	1.88	1.72	3.28	3.28
	FUSE**	3	2.5*	2.5*	2.5*	2.5*	5*	5*	2.5*	5*	5*	2.5*	2.5*	5*	5*
0.1 KVA	KVA	0.58	0.87	0.95	0.97	0.99	1.90	1.93	1.03	2.01	0.55	0.58	1.00	2.00	2.10
	AMPS	2.08	2.08	2.08	2.08	2.08	4.17	4.17	2.08	4.17	4.38	2.50	2.29	4.38	4.38
	FUSE**	4*	3	3	3	3	6	6	3	6	6	3	3	6	6
0.15 KVA	KVA	0.86	1.31	1.43	1.46	1.48	2.85	2.89	1.55	3.02	0.83	0.87	1.50	3.00	3.15
	AMPS	3.13	3.13	3.13	3.13	3.13	6.25	6.25	3.13	6.25	6.56	3.75	3.44	6.56	6.56
	FUSE**	6	5*	5*	5*	5*	10	10	5*	10	10	5*	5*	10	10
0.25 KVA	KVA	1.44	2.18	2.38	2.43	2.46	4.76	4.81	2.58	5.03	1.38	1.44	2.50	5.00	5.25
	AMPS	5.21	5.21	5.21	5.21	5.21	10.42	10.42	5.21	10.42	10.94	6.25	5.73	10.94	10.94
	FUSE**	10	8*	8*	8*	8*	15	15	8*	15	15	8*	8*	15	15
0.5 KVA	KVA	2.88	4.35	4.77	4.87	4.93	9.52	9.63	5.16	10.06	2.75	2.89	5.00	10.00	10.50
	AMPS	10.42	10.42	10.42	10.42	10.42	20.83	20.83	10.42	20.83	21.88	12.50	11.46	21.88	21.88
	FUSE**	20	15	15	15	15	30	30	15	30	30	15	15	30	30
0.75 KVA	KVA	4.31	6.53	7.15	7.30	7.39	14.27	14.44	7.73	15.09	4.13	4.33	7.50	15.00	15.75
	AMPS	15.63	15.63	15.62	15.63	15.63	31.25	31.25	15.63	31.25	32.81	18.75	17.19	32.81	32.81
	FUSE**	25	25	25	25	25	45	45	25	45	40	20	20	40	40
1 KVA	KVA	5.75	8.71	9.53	9.74	9.85	19.03	19.25	10.31	20.13	5.50	5.77	10.00	20.00	21.00
	AMPS	20.83	20.83	20.83	20.83	20.83	41.67	41.67	20.83	41.67	43.75	25.00	22.92	43.75	43.75
	FUSE**	35	30	30	30	30	60	60	30	60	60	30	30	60	60
1.5 KVA	KVA	8.63	13.06	14.30	14.61	14.78	28.55	28.88	15.47	30.19	8.25	8.66	15.00	30.00	31.50
	AMPS	31.25	31.25	31.25	31.25	31.25	62.50	62.50	31.25	62.50	65.63	37.50	34.37	65.63	65.63
	FUSE**	50	45	45	45	45	90	90	45	90	80	40	40	80	80
2 KVA	KVA	11.50	17.42	19.07	19.48	19.71	38.06	38.50	20.63	40.25	11.00	11.54	20.00	40.00	42.00
	AMPS	41.67	41.67	41.67	41.67	41.67	83.33	83.33	41.67	83.33	87.50	50.00	45.83	87.50	87.50
	FUSE**	70	60	60	60	60	110	110	60	110	110	60	60	110	110
3 KVA	KVA	17.25	26.13	28.60	29.22	29.56	57.09	57.75	30.94	60.38	16.50	17.31	30.00	60.00	63.00
	AMPS	62.50	62.50	62.50	62.50	62.50	125.00	125.00	62.50	125.00	131.25	75.00	68.75	131.25	131.25
	FUSE**	100	90	90	90	90	175	175	90	175	175	80	80	175	175
5 KVA	KVA	28.75	43.54	47.67	48.70	49.27	95.16	96.25	51.56	100.63	27.50	28.85	50.00	100.00	105.00
	AMPS	104.17	104.17	104.17	104.17	104.17	208.33	208.33	104.17	208.33	218.75	125.00	114.58	218.75	218.75
	FUSE**	175	150	150	150	150	300	300	150	300	300	150	150	300	300
	DIAGRAM	B	D	D	D	D	C	C	D	C	C	B	D	C	C

*Non NEC standard fuse size (NEC 240-6), check with local authorities for use of next larger standard size.
**Maximum fuse or circuit breaker size per NEC 450-4.

Table VI — THREE PHASE

		BOOSTING								BUCKING							
	Line Voltage	399Y/230	380	430	440	460	460	480	480	440	440	460	460	480	480	500	500
	Load Voltage	480Y/277	418	473	462	506	483	528	504	400	419	438	418	457	436	455	476
0.05 KVA	KVA	0.86	0.75	0.85	1.67	0.91	1.74	0.95	1.82	0.79	1.59	1.66	0.83	1.73	0.87	0.90	1.80
	AMPS	1.04	1.04	1.04	2.08	1.04	2.08	1.04	2.08	1.15	2.19	2.19	1.15	2.19	1.15	1.15	2.19
	FUSE**	2*	1.5*	1.5*	3	1.5*	3	1.5*	3	1.5*	3	3	1.5*	3	1.5*	1.5*	3
0.075 KVA	KVA	1.30	1.13	1.28	2.50	1.37	2.61	1.43	2.73	1.19	2.38	2.49	1.24	2.60	1.30	1.35	2.71
	AMPS	1.56	1.56	1.56	3.13	1.56	3.13	1.56	3.13	1.72	3.28	3.28	1.72	3.28	1.72	1.72	3.28
	FUSE**	3	2.5*	2.5*	5*	2.5*	5*	2.5*	5*	2.5*	5*	5*	2.5*	5*	2.5*	2.5*	5*
0.1 KVA	KVA	1.73	1.51	1.71	3.33	1.83	3.49	1.91	3.64	1.59	3.18	3.32	1.66	3.46	1.73	1.80	3.61
	AMPS	2.08	2.08	2.08	4.17	2.08	4.17	2.08	4.17	2.29	4.38	4.38	2.29	4.38	2.29	2.29	4.38
	FUSE**	4*	3	3	6	3	6	3	6	3	6	6	3	6	3	3	6
0.15 KVA	KVA	2.59	2.26	2.56	5.00	2.74	5.23	2.86	5.46	2.38	4.76	4.98	2.49	5.20	2.60	2.71	5.41
	AMPS	3.13	3.13	3.13	6.25	3.13	6.25	3.13	6.25	3.44	6.56	6.56	3.44	6.56	3.44	3.44	6.56
	FUSE**	6	5*	5*	10	5*	10	5*	10	5*	10	10	5*	10	5*	5*	10
0.25 KVA	KVA	4.32	3.77	4.27	8.34	4.56	8.71	4.76	9.09	3.97	7.94	8.30	4.15	8.66	4.33	4.51	9.02
	AMPS	5.21	5.21	5.21	10.42	5.21	10.42	5.21	10.42	5.73	10.94	10.94	5.73	10.94	5.73	5.73	10.94
	FUSE**	10	8*	8*	15	8*	15	8*	15	8*	15	15	8*	15	8*	8*	15
0.5 KVA	KVA	8.64	7.54	8.53	16.67	9.13	17.43	9.53	18.19	7.94	15.88	16.60	8.30	17.32	8.66	9.02	18.04
	AMPS	10.42	10.42	10.42	20.83	10.42	20.83	10.42	20.83	11.46	21.88	21.88	11.46	21.88	11.46	11.46	21.88
	FUSE**	20	15	15	30	15	30	15	30	15	30	30	15	30	15	15	30
0.75 KVA	KVA	12.96	11.31	12.80	25.01	13.69	26.14	14.29	27.28	11.91	23.82	24.90	12.45	25.98	12.99	13.53	27.06
	AMPS	15.62	15.63	15.63	31.25	15.63	31.25	15.63	31.25	17.19	32.81	32.81	17.19	32.81	17.19	17.19	32.81
	FUSE**	25	25	25	45	25	45	25	45	20	40	40	20	40	20	20	40
1 KVA	KVA	17.28	15.08	17.07	33.34	18.26	34.86	19.05	36.37	15.88	31.75	33.20	16.60	34.64	17.32	18.04	36.08
	AMPS	20.83	20.83	20.83	41.67	20.83	41.67	20.83	41.67	22.92	43.75	43.75	22.92	43.75	22.92	22.92	43.75
	FUSE**	35	30	30	60	30	60	30	60	30	60	60	30	60	30	30	60
1.5 KVA	KVA	25.92	22.62	25.60	50.01	27.39	52.29	28.58	54.56	23.82	47.63	49.80	24.90	51.96	25.98	27.06	54.13
	AMPS	31.25	31.25	31.25	62.50	31.25	62.50	31.25	62.50	34.38	65.63	65.63	34.38	65.63	34.37	34.37	65.63
	FUSE**	50	45	45	90	45	90	45	90	40	80	80	40	80	40	40	80
2 KVA	KVA	34.55	30.17	34.14	66.68	36.52	69.72	38.11	72.75	31.75	63.51	66.40	33.20	69.28	34.64	36.08	72.17
	AMPS	41.67	41.67	41.67	83.33	41.67	83.33	41.67	83.33	45.83	87.50	87.50	45.83	87.50	45.83	45.83	87.50
	FUSE**	70	60	60	110	60	110	60	110	60	110	110	60	110	60	60	110
3 KVA	KVA	51.83	45.25	51.20	100.03	54.78	104.57	57.16	109.12	47.63	95.26	99.59	49.80	103.92	51.96	54.13	108.25
	AMPS	62.50	62.50	62.50	125.00	62.50	125.00	62.50	125.00	68.75	131.25	131.25	68.75	131.25	68.75	68.75	131.25
	FUSE**	100	90	90	175	90	175	90	175	80	175	175	80	175	80	80	175
5 KVA	KVA	86.39	75.42	85.34	166.71	91.29	174.29	95.26	181.87	79.39	158.77	165.99	82.99	173.21	86.60	90.21	180.42
	AMPS	104.17	104.17	104.17	208.33	104.17	208.33	104.17	208.33	114.58	218.75	218.75	114.58	218.75	114.58	114.58	218.75
	FUSE**	175	150	150	300	150	300	150	300	150	300	300	150	300	150	150	300
	Number of Transformers	3	2	2	2	2	2	2	2	2	2	2	2	2	2	2	2
	DIAGRAM	E	G	G	H	G	H	G	H	G	H	H	G	H	G	G	H

*Non NEC standard fuse size (NEC 240-6), check with local authorities for use of next larger standard size.
**Maximum fuse or circuit breaker size per NEC 450-4.

Output voltage for lower input voltage can be found by: $\frac{\text{Rated Output Voltage}}{\text{Rated Input Voltage}}$ x Input Actual Voltage = Output New Voltage.

Output KVA available at reduced input voltage can be found by: $\frac{\text{Actual Intput Voltage}}{\text{Rated Input Voltage}}$ x Output KVA = New KVA Rating.

EATON | Cutler-Hammer

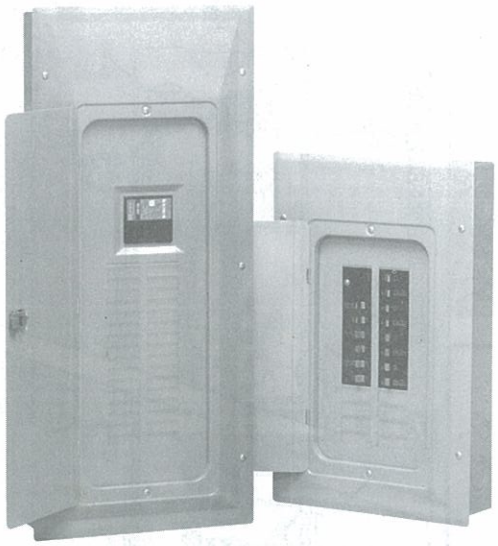

Installation Instructions for Cutler-Hammer Type CH and BR Loadcenters

Installation des tableaux de répartition Cutler-Hammer de type CH et BR

Instrucciones para la instalación de centros de carga tipos CH y BR de Cutler-Hammer

Congratulations!

You have purchased a Cutler-Hammer Loadcenter, which includes many features recommended by electrical contractors, resulting in a product that is easier to mount and wire.

⚠DANGER

Hazardous voltage. Can cause severe injury or death.

Turn off main power before opening panel.

⚠ WARNING

Turn off or disconnect the power supplying this equipment before beginning work.

This may require that you contact your electric utility to disconnect power to an existing load-center. The line side of the main breaker is energized unless power is disconnected upstream. Eaton Electrical Inc. will not assume responsibility for property damage or personal injury resulting from misuse of the information in this publication.

⚠ WARNING

Eaton Electrical Inc. strongly recommends that these products be installed by a qualified electrical professional.

IMPORTANT – INSTALL EQUIPMENT IN CONFORMANCE WITH CODES

This product must be installed in accordance with the National Electrical Code (NEC) or the Canadian Electrical Code (CEC) and any applicable local codes. Before installing equipment, check with your local electrical inspector for requirements and information. If you have questions or need assistance, contact a qualified electrical contractor.

Félicitations !

Vous venez d'acheter un tableau de répartition Cutler-Hammer, un produit facile à monter et à câbler grâce à ses nombreuses caractéristiques recommandées par les électriciens professionnels.

⚠DANGER

Tension dangereuse. Peut causer des blessures graves ou la mort.

Coupez l'alimentation en électricité avant d'ouvir le panneau.

⚠ AVERTISSEMENT !

Couper ou débrancher la source d'alimentation avant de démarrer les travaux.

Ceci peut nécessiter l'intervention du service public d'électricité local pour couper l'alimentation d'une station de distribution existante. Le côté secteur du disjoncteur principal reste sous tension jusqu'à coupure de l'alimentation en amont. Eaton Electrical Inc. décline toute responsabilité en cas de dommages matériels ou corporels résultant d'une interprétation abusive des renseignements figurant dans cette publication.

⚠ AVERTISSEMENT !

Eaton Electrical Inc. recommande fortement de faire installer ces produits par un électricien professionnel qualifié.

IMPORTANT – INSTALLER TOUT LE MATÉRIEL EN CONFORMITÉ AVEC LA RÉGLEMENTATION EN VIGUEUR

Ce produit doit être installé en conformité avec le Code national de l'électricité (CNE) ou le Code canadien de l'électricité (CCE) et toute réglementation locale en vigueur. Avant l'installation, veiller à s'informer des exigences réglementaires et autres considérations pertinentes auprès de l'inspecteur en électricité local. Pour toute question ou demande d'assistance, contacter un électricien qualifié.

!Felicidades!

Usted ha comprado un centro de carga manufacturado por Cutler-Hammer que incluye avances técnicos y que resultan en un producto fácil de montar y cablear.

⚠PELIGRO

Voltaje peligroso. Puedo ocasionar lesiones graves o la muerte.

Desconecte el interruptor principal de suministro eléctrico antes de abrir el panel.

⚠ ¡ ADVERTENCIA !

Antes de iniciar un trabajo dentro del tablero desconecte eléctrica.

Esto podría requerir que usted contactara a su empresa eléctrica para desconectar la energía eléctrica que alimenta a un centro de carga ya instalado. El lado de la línea de los interruptores principales estará activado salvo que la energía eléctrica le sea desconectada. Eaton Electrical Inc. no asumirá responsabilidad alguna por los daños materiales causados ni por las lesiones personales que resulten como consecuencia del mal uso de la información que contiene este publicación.

⚠ ¡ ADVERTENCIA !

Eaton Electrical Inc. recomienda que la instalación de estos productos sea realizada por un electricista profesional experto.

IMPORTANTE – INSTALE EL EQUIPO CUMPLIENDO CON LOS CÓDIGOS APLICABLES

Este producto debe instalarse de acuerdo con el Código Eléctrico Estadounidense (NEC) o el Código Eléctrico Canadiense (CEC) y todos los códigos locales aplicables. Antes de instalarlo, solicite a un inspector eléctrico local los requisitos e información necesarios para realizar dicha instalación. Si tiene preguntas o necesita ayuda, contacte a un contratista eléctrico calificado.

1 Remove Backpan (Optional)

Remove backpan if desired for wiring or pulling cables by (1) removing top mounting screw and (2) loosening bottom mounting screw. Backpan can then be lifted out. Replace after pulling conductors into enclosure.

Démonter la plaque de fond (facultatif)

Pour faciliter le branchement ou le tirage des câbles, il est possible de démonter la plaque de fond de la façon suivante : (1) démonter la vis de fixation supérieure puis (2) desserrer la vis de fixation inférieure. La plaque de fond peut ensuite être détachée. La remettre en place une fois que les conducteurs ont été tirés dans le coffret.

Retire el panel (opcional)

Si lo desea, retire el panel para realizar el cableado o para acomadar los cables. Hágalo de la siguiente manera: (1) quite el tornillo de montaje superior y (2) afloje el tornillo de montaje inferior. El panel estará listo para sacarse. Colóquelo nuevamente en su lugar después de pasar los conductores y colocarlos dentro del gabinete.

2 Remove Enclosure Knockouts

Remove only those knockouts required for installation of cable clamps or conduit. Remove center knockout (top or bottom) by (1) driving inward*, (2) prying up or driving in the rings one at a time, and (3) using pliers to bend rings back and forth until detached. Knockouts are used to pull cable into enclosure. To prevent damage to insulation, use only approved clamps, conduit, and fittings.

** Knockouts 1/2" (12.7 mm) and 3/4" (19.1mm) on the top, sides, and bottom are removed by driving outward.*

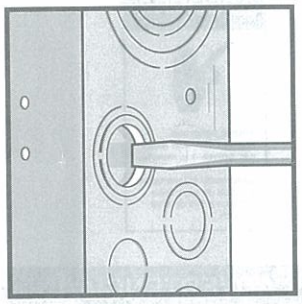

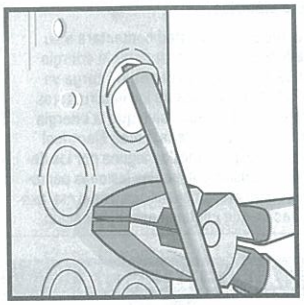

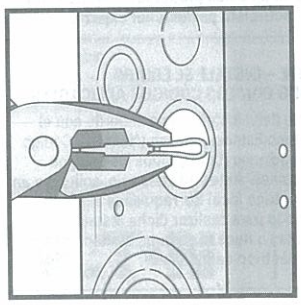

Percer les débouchures

Percer uniquement les débouchures requises pour l'installation des colliers de câble ou des gaines. Extraire la débouchure centrale (supérieure ou inférieure) de la façon suivante : (1) pousser vers l'intérieur*, (2) faire levier ou pousser les anneaux un à un puis (3) à l'aide d'une pince, plier les anneaux d'un côté à l'autre jusqu'à ce qu'ils soient détachés. Les débouchures servent à faire pénétrer les câbles dans le coffret. Afin d'éviter d'endommager l'isolation, veiller à utiliser uniquement des colliers de serrage, gaines et raccords homologués.

** Les débouchures (1/2 po/12,7 mm et 3/4 po/19,1mm) sur le dessus, les côtés et le bas s'enlèvent en les poussant vers l'extérieur.*

Retire los chiquiadores (knockouts) de la caja del gabinete

Retire solamente aquellos chiquiadores que se necesitan para la instalación de los conectores o conductos para cables. Retire el chiquiadore central (superior o inferior) mediante (1) un movimiento hacia adentro,* (2) palanqueando hacia arriba o empujando hacia adentro los anillos de uno en uno, y (3) utilizando unas pinzas para doblar los anillos de un lado a otro hasta que se desprendan. Los chiquiadores se usan para pasar los cables hacia adentro del gabinete. Para evitar que el aislamiento se dañe, use solamente abrazaderas, conductos y accesorios aprobados para tales fines.

** Los chiquiadores de 1/2" (12.7 mm) y 3/4" (19.1mm) que se encuentran en las partes superior, inferior y laterales se retiran con un movimiento hacia afuera.*

3 Surface Mounting

Align and level enclosure by means of removable nails or screws inserted through centered keyholes at top and bottom*. Fasten enclosure to wall, using four surface mounting holes (two each at top and bottom) and appropriate user-furnished fasteners. After fastening, remove nails or screws from keyholes.

** Keyholes are for alignment only using temporary nails or screws.*

Montage en saillie

Positionner le boîtier et le mettre de niveau à l'aide de clous ou vis temporaires passés à travers les trous de serrure supérieurs et inférieurs*. Fixer le boîtier sur le mur par les quatre orifices prévus pour le montage en saillie (deux en haut et deux en bas) à l'aide fixations appropriées. Après serrage, extraire les clous ou vis temporaires des trous de serrure.

** Les trous de serrure sont prévus uniquement à des fins d'alignement à l'aide de clous ou vis temporaires.*

Montaje tipo sobreponer

Ajuste y nivele la caja por medio de los clavos o tornillo provisionales que se encuentran insertados a través de las bocallaves centradas en la parte de arriba y de abajo*. Fije la caja a la pared utilizando los cuatro orificios de montaje tipo sobreponer (dos en la parte superior y dos en la parte inferior) y los fijadores correspondientes provistos por el usuario. Después de fijar la caja, quite los clavos o tornillos de las bocallaves.

** Las bocallaves están concebidas solamente para ajuste por medio de clavos o tornillos provisionales.*

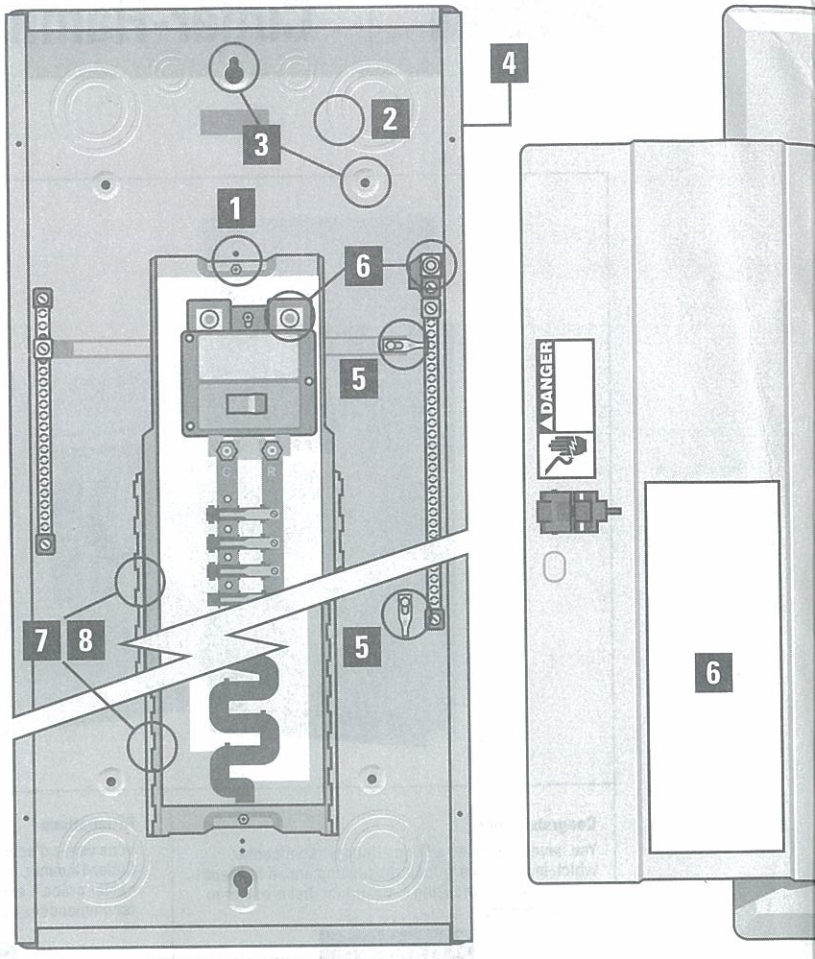

U.S. Design Shown

4 Indoor Flush Mounting

Install enclosure between studs. Locate front edge of enclosure flush with finished wall. (Both sides of enclosure are provided with 3/8" (17.1mm) and 1/2" (12.7mm) dry wall scribe markings to aid when flush mounting). Oval knockouts are provided on side of enclosure for mounting. Remove knockout and nail or screw through oval opening.

Montage encastré à l'intérieur

Installer le boîtier entre deux poteaux de manière à affleurer son bord avant au niveau du mur fini (les deux côtés du coffret comportent des repères de positionnement encastré pour cloison sèche de 3/8 po/9,5 mm et 1/2 po/12,7 mm). Le coffret présente des débouchures oblongues sur les côtés pour le montage. Les percer et utiliser des clous ou des vis à travers les orifices.

Montaje tipo embutido en interiores

Instale el gabinete sobre aumentos. Coloque el borde frontal de la caja al ras de la pared terminada. (Ambos laterales de la caja están provistos de marcas de rayas para mampostería en seco de 3/8" (9.5 mm) y 1/2" (12.7 mm), que ayudarán al montaje tipo embutido). Los chiquiadores de los laterales del gabinete están destinados al montaje. Retire el chiquiador e inserte el clavo o tornillo a través de la abertura ovalada.

5 Grounding and Bonding

Refer to the NEC or CEC and applicable local codes for proper grounding methods.

A. For service entrance applications, attach bonding strap to neutral bar. Torque neutral wire screws to 35 lb.-in.

B. For second tier panels fed from the service entrance panel, DO NOT attach bonding strap.

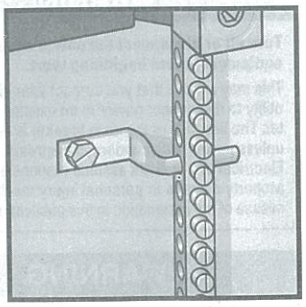

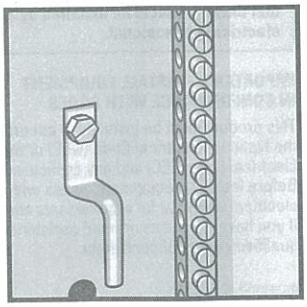

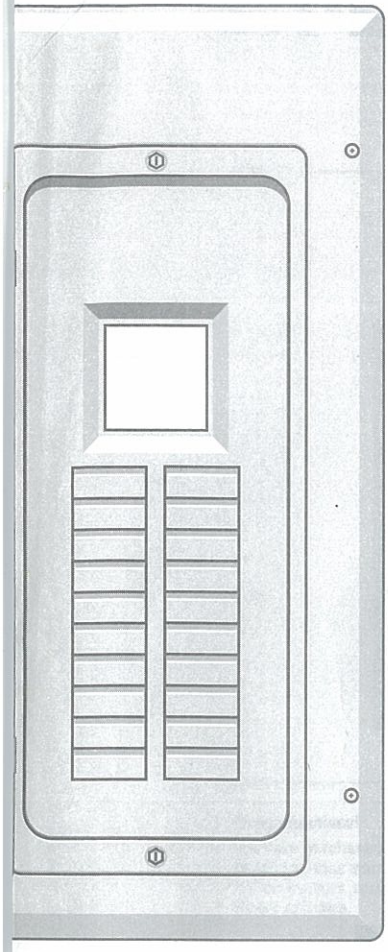

Liaison équipotentielle et mise à la terre

Se reporter aux méthodes de mise à la terre stipulées par le CNE ou le CCE et par la réglementation locale en vigueur.

A. Pour les tableaux d'abonné, raccorder le feuillard de liaison équipotentielle au plot neutre. Serrer les vis de connexion de neutre à 4,0 N.m (35 lb.in).

B. Pour les tableaux secondaires alimentés par le tableau d'abonné, NE PAS raccorder le feuillard de liaison équipotentielle.

Conexión a tierra y enlace a tierra

Remítase a los códigos NEC o CEC y a los códigos locales correspondientes para obtener los métodos de conexión a tierra pertinentes.

A. Para las aplicaciones de acceso a servicio, conecte la tira de enlace a tierra a la barra del neutro. Aplique un par de apriete de 35 lb-pulg a los tornillos del conductor neutro.

B. Para centros de carga de segundo nivel alimentados desde el centro de carga de acceso a servicio, NO conecte la tira de enlace a tierra.

6 Wire Mains and Neutral

Install main and neutral wires. Torque wire pressure screws to value shown on main label located on inside of door.

Montage des fils de phase et de neutre

Installer les fils de phase et de neutre. Serrer les vis de connexion des fils au couple indiqué sur l'étiquette principale apposée sur la face intérieure de la porte.

Conecte fase(s) y neutro

Instale fase(s) y neutro. Aplique un par de apriete a los tornillos de presión de los conductores hasta lograr el valor que se indica en la etiqueta principal en la parte interior de la puerta.

7 Installing Branch Circuit Breakers

Install CH branch circuit breakers by hooking the foot of the breaker on the rail of the backpan and pressing the breaker onto the bus stabs.

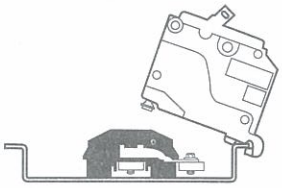

Install BR branch circuit breakers by sliding the foot of the breaker under the rail of the backpan and pushing the breaker onto the bus stab.

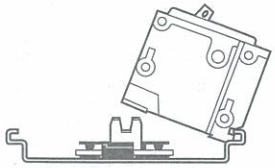

DO NOT USE LUBRICANT OF ANY KIND ON EITHER BUS OR BREAKER STAB.

Installation des disjoncteurs divisionnaires

Monter les disjoncteurs divisionnaires CH en accrochant le pied du disjoncteur dans le rail de la plaque de fond puis en enfonçant le disjoncteur sur les lames omnibus.

Monter les disjoncteurs divisionnaires BR en glissant le pied du disjoncteur sous le rail de la plaque de fond puis en enfonçant le disjoncteur sur la lame omnibus.

NE PAS UTILISER DE LUBRIFIANT SUR LA BARRE OMNIBUS OU LE CONTACT DU DISJONCTEUR.

Instalación de interruptores de circuito de derivación

Instale los interruptores de circuito de derivación CH enganchando las patas del interruptor al riel de la bandeja posterior y presionándolo hacia las cuchillas de la barra-de distribución.

Instale los interruptores de circuito de derivación BR deslizando las patas del interruptor por debajo del riel de la bandeja posterior y presionándolo hacia la cuchilla de la barra de distribución.

NO APLIQUE NINGUN TIPO DE LUBRICANTE A LA BARRA DE DISTRIBUCION NI A LA CUCHILLA DEL INTERRUPTOR.

8 Connect Branch Circuit Wires

Connect branch circuit wire to load end of circuit breaker. Tighten wire pressure screw to torque value specified on loadcenter enclosure.

Raccordement du circuit de dérivation

Raccorder le fil du circuit de dérivation au côté charge du disjoncteur. Serrer la vis de connexion du fil au couple indiqué sur le coffret.

Conecte los cables del circuito de derivación

Conecte el cable del circuito de derivación al extremo de carga del interruptor de circuito. Apriete el tornillo de presión del alambre hasta lograr el valor de par de torsión que se especifica en la caja del centro de carga.

9 Remove Twistouts

Remove only those twistouts that match corresponding breaker positions. Remove twistouts by striking with a screwdriver and twisting back and forth with pliers. Any twistouts accidentally removed can be closed with filler plates ordered from your merchant.

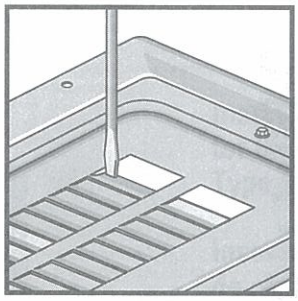

Enlever les caches défonçables

N'enlever que les caches défonçables correspondant à l'emplacement des disjoncteurs. Pour enlever un cache, frapper avec un tournevis puis plier d'un côté à l'autre avec une pince. Les caches défonçables détachés par erreur pourront être remplacés par des caches amovibles pouvant être commandées auprès du revendeur.

Retire las placas de cubierta de interruptores

Retire solamente aquellas placas de cubierta de interruptores que coinciden en las posiciones de los interruptores correspondientes. Retire las mismas golpeándolas con un destornillador y torciéndolas de un lado a otro con una pinza. Cualquier placa que se retire accidentalmente, su posición puede cerrarse utilizando placas de relleno solicitadas a su distribuidor.

10 Level Trim

For flush mounting, inner cover can be adjusted to fit snugly against breakers. To adjust cover inward, turn the two adjusting screws counter clockwise. Adjust each screw alternately until desired fit is achieved.

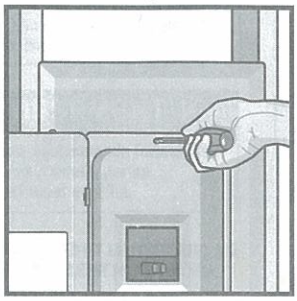

Ajustement du niveau

Dans le cas d'un montage encastré, il est possible d'ajuster la position du capot intérieur sur les disjoncteurs. Pour déplacer le capot vers l'intérieur, tourner les vis de réglage dans le sens inverse des aiguilles d'une montre. Régler successivement chaque vis jusqu'à obtenir l'ajustement souhaité.

Ajuste para nivelar

Para el montaje embutido, la cubierta interior puede ajustarse para que entre bien apretada contra los interruptores. Para ajustar la cubierta hacia adentro, gire los dos tornillos de ajuste en sentido contrario a las manecillas del reloj. Ajuste cada tornillo alternadamente hasta que se logre la posición deseada.

11 Identify Loadcenter Use and Circuits

A. Apply "Service Disconnect" label near main breaker handle if loadcenter is used as main service panel.

B. Apply "Main" label near main breaker handle if loadcenter is used as a subfeed panel.

C. Apply circuit directory labels on inner cover along outside edges of twistouts.

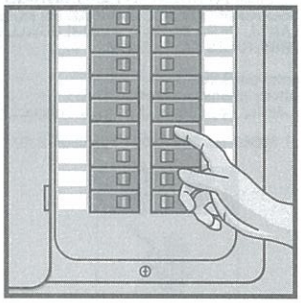

Marquage du tableau et des circuits

A. Si le tableau de répartition est un tableau d'abonné, apposer l'étiquette « Service Disconnect/Coupure secteur » (Service Disconnect) près de la manette du disjoncteur principal.

B. Si le tableau de répartition est un tableau secondaire, apposer l'étiquette « Main/Disjoncteur principal » (Main) près de la manette du disjoncteur principal.

C. Apposer des étiquettes de description des circuits sur le capot intérieur, aux bords extérieurs des caches défonçables.

Identifique el uso y los circuitos del centro de carga

A. Coloque la etiqueta "Desconexión de servicio" cerca de la palanca del interruptor principal si el centro de carga será utilizado como el panel de servicio principal.

B. Coloque la etiqueta "Principal" cerca de la palanca del interruptor principal si el centro de carga será utilizado como el panel de subalimentación.

C. Coloque las etiquetas del directorio de circuitos en la cubierta interior, a lo largo de los bordes exteriores de las placas de cubierta de los interruptores.

IMPORTANT: Before energizing loadcenter, re-check all electrical connections after all wiring has been completed and breakers have been installed in the loadcenter.

IMPORTANT : Avant de mettre le panneau de distribution sous tension, vérifiez de nouveau toutes les connexions électriques après que tous les branchements aient été complétés et les disjoncteurs, installés.

IMPORTANTE: Una vez que se haya completado todo el cableado y que se hayan instalado los interruptores en le centro de carga, revise nuevamente todas las conexiones eléctricas antes de energizarlo.

Recommended Installations Instructions for Aluminum Wire Termination

When using connectors marked for Al use, the following is a guide to prevent overheating:

1. Carefully strip insulation, taking care not to nick or ring wires.
2. Thoroughly clean stripped portion with a wire brush. Do not abrade surfaces of connectors.
3. Immediately coat cleaned wire with any recognized corrosion inhibiting joint compound such as:
   - Blackburn CONTAX paste
   - Burndy PENTROX paste
   - Penn-Union CUAL-AID
4. Insert wire into connector, making certain all strands are included, and securely tighten connector clamping screws. Refer to wiring diagram inside loadcenter door for proper torque.
5. Wipe excess compound from connection area.

   Note: *Some compounds are contact aiding with conductive particles, which can reduce the dielectric strength of equipment insulation system.*
6. Torque wire pressure screws for all conductors. For proper torque values, refer to the specifications label on circuit breakers and inside of loadcenter door.

Conseils d'installation pour les fils à contact aluminium

Lors de l'utilisation de borniers prévus pour l'aluminium, respecter les conseils suivants afin d'écarter les risques de surchauffe :

1. Dénuder les fils avec précaution en prenant garde à ne pas les entailler.
2. Nettoyer avec soin les portions dénudées à l'aide d'une brosse métallique. Veiller à ne pas éroder les surfaces de contact.
3. Enrober immédiatement le fil nettoyé d'une pâte anticorrosion du type :
   - Pâte CONTAX de Blackburn
   - Pâte PENTROX de Burndy
   - CUAL-AID de Penn-Union
4. Introduire le fil dans le bornier en veillant à ce que tous les brins soient inclus puis bien serrer la vis de contact. Le couple de serrage approprié est indiqué sur le schéma de câblage à l'intérieur de la porte du coffret.
5. Essuyer l'excès de pâte au niveau des borniers.

   Remarque : *Certaines pâtes contiennent des particules conductrices servant à améliorer le contact, ce qui peut contribuer à réduire la rigidité diélectrique du dispositif d'isolation de l'appareil.*
6. Serrer au couple les vis de contact de tous les câbles. Se reporter aux valeurs de serrage indiquées sur les étiquettes des disjoncteurs et à l'intérieur de la porte du coffret.

Instrucciones recomendadas para la instalación de terminaciones de alambres de aluminio

Cuando use conectores marcados para uso A1, guíese según lo siguiente para prevenir el sobrecalentamiento:

1. Quite el aislamiento cuidadosamente para evitar hacer muescas a los alambres ni cortarlos circularmente.
2. Limpie a fondo la porción desnuda con un cepillo de metal. No raspe la superficie de los conectores.
3. Cubra el alambre limpio inmediatamente con un compuesto de pegamento inhibidor de corrosión de marca como:
   - Pasta CONTAX de Blackburn
   - Pasta PENTROX de Burndy
   - CUAL-AID de Penn-Union
4. Inserte el conductor en el conector asegurándose de que todos los hilos estén incluidos y apriete bien los tornillos de fijación del conector. Remítase al diagrama eléctrico que se encuentra en la parte interior de la puerta del centro de carga para obtener el par de apriete correspondiente.
5. Limpie el exceso de compuesto del área de conexión.

   Nota: *Algunos compuestos tienen partículas conductoras y constituyen una ayuda para el contacto, que puede reducir la resistencia dieléctrica del sistema de aislamiento del equipo.*
6. Apriete todos los tornillos de presión de todos los conductores. Para obtener los valores de par de apriete correspondientes, remítase a la etiqueta de especificaciones que se encuentra en los interruptores y en la parte interior de la puerta del centro de carga.

Indoor Main Breaker and Main Lug Loadcenters Are Reversible

Single-phase main breaker and main lug loadcenters may be installed with the main device in either the top or bottom position. No modification is required. Outdoor NEMA 3R loadcenters are not reversible.

Les panneaux de distribution intérieurs munis d'un disjoncteur principal et d'un bornier d'arrivée peuvent être inversés

Le disjoncteur principal monophasé et les borniers d'arrivée peuvent être installés dans le coffret principal, en position haute ou basse. Aucune modification n'est nécessaire. Les panneaux de distribution NEMA 3R extérieurs ne peuvent pas être inversés.

El interruptor principal de interior y los centros de carga con disyuntor principal son reversibles

El interruptor principal monofásico y los centros de carga con disyuntor principal pueden instalarse ubicando el dispositivo principal en la parte superior o inferior. No es necesario modificarlos. Los centros de carga NEMA 3R de exterior no son reversibles.

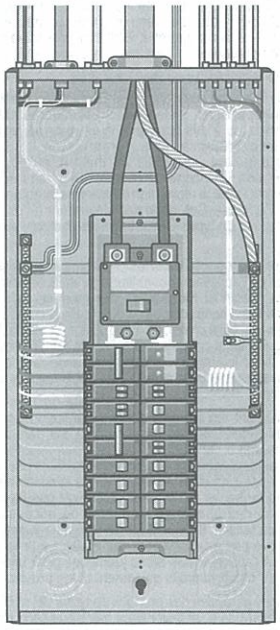

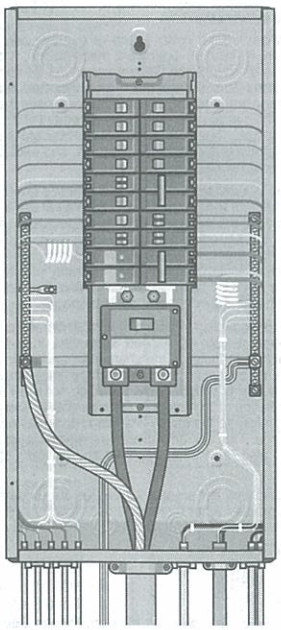

U.S. Design Shown

Copyright Eaton Electrical Inc., 2006.
All Rights Reserved

Cutler-Hammer Limited Warranty for Purchases in U.S. and Canada

I. CH Branch Circuit Breakers

Eaton Electrical Inc. warrants its type CH branch circuit breaker to be free from failure due to defects in material and workmanship under normal care and proper usage in a residential installation made in accordance with the National Electrical Code for the life of the loadcenter in which it is installed.

In the event the circuit breaker fails to comply with this warranty, Eaton Electrical will, at its option, either repair or replace the product at without charge. To obtain warranty service, the purchaser should return the product to the place of purchase or deliver the product prepaid to Eaton Electrical at the address set forth below. Proof of purchase in the form of a receipt or invoice, which is evidence that the unit is within the warranty period, must be presented to obtain warranty service.

II. Type CH Loadcenters, Type CH Surge Panels and Type CH Meterbreaker (MB) Panels

Eaton Electrical Inc. warrants its type CH factory-installed main breaker loadcenter, type CH integrated surge panel, type CH main lug loadcenter, and type CH meterbreaker combination panel to be free from failure due to defects in material and workmanship under normal care and proper usage in a residential installation in a residential installation which fully complies with all National Electrical Code requirements for the life of the product.

In the event the product fails to comply with this warranty, Eaton Electrical will, at its option, either repair or replace the product at without charge. To obtain warranty service, the purchaser should return the product to the place of purchase or deliver the product prepaid to Eaton Electrical at the address set forth below. Proof of purchase in the form of a receipt or invoice, which is evidence that the unit is within the warranty period, must be presented to obtain warranty service.

III. BR Branch Circuit Breakers

Eaton Electrical Inc. warrants its type BR branch circuit breaker to be free from failure due to defects in material and workmanship under normal care and proper usage in a residential installation which fully complies with all National Electrical Code requirements for a period of 10 years from the date of installation. In the event the circuit breaker fails to comply with this warranty, Eaton Electrical will, at its option, either repair or replace the product at without charge. To obtain warranty service the purchaser should return the product to the place of purchase or deliver the product prepaid to Eaton Electrical at the address set forth below. Proof of purchase in the form of a receipt or invoice, which is evidence that the unit is within the warranty period, must be presented to obtain warranty service.

IV. Type BR Loadcenters and Type BR Meterbreaker (MB) Panels

Eaton Electrical Inc. warrants its type BR factory-installed main breaker loadcenter, type BR main lug loadcenter, and type BR Meterbreaker combination panel to be free from failure due to defects in material and workmanship under normal care and proper usage in a residential installation which fully complies with all National Electrical Code requirements for a period of 10 years from the date of installation.

In the event the product fails to comply with this warranty, Eaton Electrical will, at its option, either repair or replace the product at without charge. To obtain warranty service the purchaser should return the product to the place of purchase or deliver the product prepaid to Eaton Electrical at the address set forth below. Proof of purchase in the form of a receipt or invoice, which is evidence that the unit is within the warranty period, must be presented to obtain warranty service.

V. Additional Information

These warranties do not cover failure or damage due to improper storage, installation, operation, maintenance, accident, misuse, abuse or negligence. These warranties do not cover reimbursement for labor, transportation, gaining access, removal, installation, temporary power, or any other expenses that may be incurred in connection with repair or replacement of the Eaton Electrical products. These warranties cover residential use of the type CH products and type BR products, and exclude any commercial applications.

The remedies as provided under these warranties are the exclusive remedy of the purchaser and the limit of the liability of Eaton Electrical Inc. with respect to these products, whether in contract, in tort (including negligence or strict liability) or otherwise. Eaton Electrical Inc. disclaims all other warranties, including without limitation any implied warranty of merchantability or of fitness for a particular purpose, and shall not be liable for any incidental or consequential damages.

With respect to products purchased by consumers of the United States for personal use, the implied warranties, including but not limited to the warranties of merchantability and of fitness for a particular purpose, are not excluded but are limited to the duration of the warranty period. Some states do not allow the exclusion or limitation of incidental or consequential damages or implied warranties, so the above limitations or exclusions may not apply to you. This warranty gives you specific legal rights, and you may also have other rights which vary from state to state.

All type CH and type BR product warranties are rendered null and void if a breaker other than those specifically listed by UL for use in them is installed.

EATON ELECTRICAL INC.
WARRANTY DEPARTMENT
1725 1200TH AVENUE
LINCOLN, IL 62656

For Loadcenters Purchased In Mexico, Please See Back Page For Applicable Warranty.

Garantie limitée Cutler-Hammer pour les acheteurs aux États-Unis et au Canada

I. Disjoncteurs de dérivation de type CH

Eaton Electrical Inc. garantit ses disjoncteurs de dérivation de type CH contre tout défaut de matériau et de main-d'œuvre suite à un usage normal et à un entretien adéquat, dans une installation résidentielle conforme au Code national de l'électricité pendant toute la durée de vie du panneau de distribution dans lequel ils sont installés.

Si le disjoncteur n'est pas conforme à la garantie, Eaton Electrical remplacera ou, à sa discrétion, réparera gratuitement le produit. Pour obtenir un recours en garantie, l'acheteur doit renvoyer le produit au détaillant ou le faire livrer port payé à Eaton Electrical, à l'adresse indiquée ci-dessous. Une preuve d'achat, sous forme d'un reçu ou d'une facture, certifiant que le dispositif est sous garantie, doit être présentée pour tout recours en garantie.

II. Panneaux de distribution, panneaux de surtension et panneau de compteur (MB) de type CH Panneaux

Eaton Electrical Inc. garantit son panneau de distribution du disjoncteur principal installé à l'usine, de type CH, son panneau de surtension intégré, de type CH, son panneau de distribution de bornier d'arrivée, de type CH, et son panneau mixte de compteur, de type CH, contre tout défaut de matériau et de main-d'œuvre suite à un usage normal et à un entretien adéquat dans une installation résidentielle entièrement conforme au Code national de l'électricité, pendant la durée de vie du produit.

Si le produit devait s'avérer non conforme à la garantie, Eaton Electrical le remplacera ou, à sa discrétion, le réparera gratuitement. Pour obtenir un recours en garantie, l'acheteur doit renvoyer le produit au détaillant ou le faire livrer port payé à Eaton Electrical, à l'adresse indiquée ci-dessous. Une preuve d'achat, sous forme d'un reçu ou d'une facture, certifiant que le dispositif est sous garantie, doit être présentée pour tout recours en garantie.

III. Disjoncteurs de dérivation de type BR

Eaton Electrical Inc. garantit ses disjoncteurs de dérivation de type BR contre tout défaut de matériau et de main-d'œuvre suite à un usage normal et à un entretien adéquat dans une installation résidentielle conforme à toutes les exigences du Code national de l'électricité, pendant une période de 10 ans à partir de la date d'installation.

Si le disjoncteur devait s'avérer non conforme à la garantie, Eaton Electrical le réparera ou, à sa discrétion, le remplacera gratuitement. Pour obtenir un recours en garantie, l'acheteur doit renvoyer le produit au détaillant ou le faire livrer port payé à Eaton Electrical, à l'adresse indiquée ci-dessous. Une preuve d'achat, sous forme d'un reçu ou d'une facture, certifiant que le dispositif est sous garantie, doit être présentée pour tout recours en garantie.

IV. Panneaux de distribution de type BR et panneaux de compteur (MB) de type BR

Eaton Electrical Inc. garantit son panneau de distribution de disjoncteur principal de type BR, son panneau de distribution de bornier d'arrivée de type BR et son panneau mixte de compteur de type BR contre tout défaut de matériau et de main-d'œuvre suite à un usage normal et à un entretien adéquat dans une installation résidentielle conforme à toutes les exigences du Code national de l'électricité, pendant une période de 10 ans à partir de la date d'installation.

Si le produit devait s'avérer non conforme à la garantie, Eaton Electrical le remplacera ou, à sa discrétion, le réparera gratuitement. Pour obtenir un recours en garantie, l'acheteur doit renvoyer le produit au détaillant ou le faire livrer port payé à Eaton Electrical, à l'adresse indiquée ci-dessous. Une preuve d'achat, sous forme d'un reçu ou d'une facture, certifiant que le dispositif est sous garantie, doit être présentée pour tout recours en garantie.

V. Renseignements supplémentaires

Ces garanties ne couvrent pas les défauts ou dommages dus à des entreposages, installations, utilisations, entretiens non conformes, ou à des accidents, à un mauvais usage, à l'abus ou à la négligence. Ces garanties ne couvrent pas le remboursement pour frais de main-d'œuvre, de dépose, d'installation, de panne de courant temporaire ou pour autres dépenses liées à la réparation ou au remplacement des produits Eaton Electrical. Ces garanties s'étendent à l'usage ménager des produits de types CH et BR mais excluent toute utilisation commerciale.

Les recours énoncés dans les présentes sont les seuls à la disposition de l'acheteur et constituent la limite de la responsabilité d'Eaton Electrical Inc. envers ces produits, qu'il s'agisse de responsabilité contractuelle ou délictuelle (y compris négligence ou responsabilité civile), ou autre. Eaton Electrical Inc. nie toute autre garantie, y compris à titre non limitatif, toute garantie tacite relative à la qualité loyale et marchande ou à la convenance à un usage particulier, et ne saurait être tenu responsable de dommages indirects ou accessoires.

Relativement aux produits achetés par les consommateurs au Canada à des fins d'usage personnel, les garanties tacites, y compris à titre non limitatif, les garanties relatives à la qualité loyale et marchande et à la convenance à un usage particulier, ne sont pas exclues mais se limitent à la durée de la garantie. Comme certaines provinces n'autorisent pas l'exclusion ou la limitation des dommages indirects ou accessoires ou des garanties tacites, il se peut que la limitation susmentionnée ne s'applique pas à un acheteur particulier. La présente garantie octroie à l'acheteur des droits juridiques particuliers, et celui-ci peut jouir d'autres droits qui varient d'une province à l'autre.

Toutes les garanties des produits de types CH et BR sont nulles et non avenues si un disjoncteur autre que ceux répertoriés UL et convenant à ce panneau est installé dans le panneau de distribution.

EATON ELECTRICAL INC.
WARRANTY DEPARTMENT
1725 1200TH AVENUE
LINCOLN, IL 62656 ÉTATS-UNIS

Relativement aux panneaux de distribution achetés au Mexique, consulter la garantie en vigueur au dos.

Garantía limitada de Cutler-Hammer para compras en los EE. UU. y Canadá

I. Interruptores de circuito de ramal tipo CH

Eaton Electrical Inc. garantiza que durante toda la vida útil del centro de carga en que se lo instale, su interruptor de circuito de ramal tipo CH está libre de defectos de material y de mano de obra bajo condiciones normales de mantenimiento y de uso adecuado en instalaciones residenciales, de acuerdo con el Código Eléctrico Nacional.

Si el interruptor fallara dentro del plazo de esta garantía, Eaton Electrical reparará o reemplazará, según su criterio y sin cargo alguno, el interruptor defectuoso. Para hacer uso de la garantía, el comprador deberá devolver el producto al lugar de compra o enviarlo por correo con franqueo pagado a Eaton Electrical, a la dirección que figura abajo. Deberá presentarse también un recibo o factura que sirva para demostrar que el producto fue comprado dentro del período de la garantía.

II. Centros de carga tipo CH, paneles de subida de tensión tipo CH y paneles medidor/interruptor tipo CH.

Eaton Electrical Inc. garantiza que durante toda la vida útil del producto, su centro de carga de interruptor principal tipo CH ensamblado de fábrica, su panel de subida de tensión tipo CH integrado, su centro de carga con disyuntor principal tipo CH y su panel combinado medidor/interruptor tipo CH están libres de defectos de material y de mano de obra bajo condiciones normales de mantenimiento y de uso adecuado en instalaciones residenciales que cumplan con todos los requisitos del Código Eléctrico Nacional.

Si el producto fallara dentro del plazo de esta garantía, Eaton Electrical reparará o reemplazará, según su criterio y sin cargo alguno, el producto defectuoso. Para hacer uso de la garantía, el comprador deberá devolver el producto al lugar de compra o enviarlo por correo con franqueo pagado a Eaton Electrical, a la dirección que figura abajo. Deberá presentarse también un recibo o factura que sirva para demostrar que el producto fue comprado dentro del período de la garantía.

III. Interruptores de circuito de ramal tipo BR

Eaton Electrical Inc. garantiza, durante un plazo de 10 años a partir de la fecha de instalación, que su interruptor de circuito de ramal tipo BR está libre de defectos de material y de mano de obra bajo condiciones normales de mantenimiento y de uso adecuado en instalaciones residenciales que cumplan con todos los requisitos del Código Eléctrico Nacional.

Si el interruptor fallara dentro del plazo de esta garantía, Eaton Electrical reparará o reemplazará, según su criterio y sin cargo alguno, el interruptor defectuoso. Para hacer uso de la garantía, el comprador deberá devolver el producto al lugar de compra o enviarlo por correo con franqueo pagado a Eaton Electrical a la dirección que figura debajo. Deberá presentarse también un recibo o factura que sirva para demostrar que el producto fue comprado dentro del período de la garantía.

IV. Centros de carga tipo BR y paneles medidor/interruptor tipo BR

Eaton Electrical Inc. garantiza, durante un plazo de 10 años a partir de la fecha de instalación, que su centro de carga con interruptor principal tipo BR ensamblado de fábrica, su centro de carga con disyuntor principal tipo BR y su panel combinado medidor/interruptor tipo BR están libres de defectos de material y de mano de obra bajo condiciones normales de mantenimiento y de uso adecuado en instalaciones residenciales que cumplan con todos los requisitos del Código Eléctrico Nacional.

Si el producto fallara dentro del plazo de esta garantía, Eaton Electrical reparará o reemplazará, según su criterio y sin cargo alguno, el producto defectuoso. Para hacer uso de la garantía, el comprador deberá devolver el producto al lugar de compra o enviarlo por correo con franqueo pagado a Eaton Electrical, a la dirección que figura debajo. Deberá presentarse también un recibo o factura que sirva para demostrar que el producto fue comprado dentro del período de la garantía.

V. Información adicional

Estas garantías no cubren fallas ni daños causados por almacenamiento, instalación, operación o mantenimiento indebidos, accidentes, mal uso, abuso o negligencia. Tampoco cubren el reembolso de los gastos generados por mano de obra, transporte, acceso, remoción, instalación, uso de energía temporal ni cualquier otro gasto relacionado con la reparación o el reemplazo de productos Eaton Electrical. Las garantías cubren el uso residencial de los productos de tipo CH y BR pero excluyen todo tipo de uso comercial.

Las soluciones que se establecen dentro de las presentes garantías son exclusivas del comprador y representan el límite de la responsabilidad de Eaton Electrical Inc. respecto de estos productos, ya sea bajo contrato, extracontractualmente (incluida negligencia o responsabilidad civil objetiva) o de cualquier otra manera. Eaton Electrical Inc. desconoce cualquier otra garantía, incluida, a título enunciativo, cualquier garantía implícita de comercialización y adecuación para un uso o propósito específico. La compañía no será responsable por los daños secundarios o indirectos que pudieren resultar.

Con respecto a los productos adquiridos por consumidores de los Estados Unidos para uso personal, las garantías implícitas, incluidas, a título enunciativo, las garantías implícitas de comercialización y adecuación para un uso o propósito específico, no están excluidas pero sí limitadas a la duración de la garantía pertinente. Algunos estados no permiten la exclusión o limitación de los daños secundarios o indirectos o de las garantías implícitas, por lo que las limitaciones o exclusiones antes mencionadas podrían no aplicarse en su caso. Esta garantía le otorga derechos legales específicos, y al mismo tiempo, usted puede gozar de otros derechos que varían según el estado.

Las garantías de productos tipo CH y BR quedarán anuladas si se instala un interruptor distinto de los específicamente autorizados por UL para ser utilizados con dichos productos.

EATON ELECTRICAL INC.
WARRANTY DEPARTMENT
1725 1200TH AVENUE
LINCOLN, IL 62656

Para consultar las garantías aplicables a centros de carga comprados en México, consulte la parte de atrás del documento.

For Loadcenters Purchased in Mexico, the Following Warranty Applies.

Para aquellos centros de carga comprados en México, se aplica la siguiente garantía.

Póliza De Garantía
Eaton Electrical Mexicana, S.A.

Eaton Electrical Mexicana, S.A. garantiza todos los productos que ostentan su marca por el término de un año, en todas sus partes y mano de obra asi como cualquier defecto de fabricación a partir de la fecha de entrega bajo las siguientes condiciones.

1. Para hacer efectiva esta garantía, no podrán exigirse mayores requisitos que la presentación de la póliza de garantía acompañada del producto en el lugar donde fue adquirido o en nuestra planta.
2. La empresa se compromete a reparar o a cambiar el producto defectuoso así como las piezas y componentes del mismo sin ningún cargo para el cliente y a cubrir los gastos de transporte terrestre que se deriven del cumplimiento de la presente garantía.
3. Las refacciones se podrán obtener directamente donde adquirió el producto.
4. Las partes no consideradas refacciones podrán adquirirse únicamente bajo condiciones de reclamación por garantía.
5. El tiempo de reparación en ningún caso sera mayor de 30 dias contados a partir de la fecha de recepción del producto en nuestra planta.

Esta Garantía No Es Válida En Los Siguientes Casos:

A. Si se hacen reparaciones en nuestros productos fuera de la fábrica o por personas no autorizadas por la empresa.
B. Si ha sufrido deterioro esencial, irreparable y grave o por daños sufridos a consecuencia de una mala aplicación atribuible al cliente.
C. Si no han observado las advertencias señaladas.
D. Si la garantía es extemporánea.

NOTA IMPORTANTE: LA GARANTIA SE HARA EFECTIVA DESPUES DE QUE EL ARTICULO EN RECLAMACION HAYA SIDO SOMETIDO A REVISION EN NUESTRO LABORATORIO DE ASEGURAMIENTO DE CALIDAD EN NUESTRA PLANTA, PARA DEFINIR POSIBLE FALLAS ATRIBUIBLES AL CLIENTE.

Centro De Servicio
Planta y oficinas en México, D.F.
Av. Javier Rojo Gómez No. 1300 Delagación Iztapalapa

C.P. 09360 Tel. 5804-8001 Fax 5804-8007

Eaton Electrical Inc.
1000 Cherrington Parkway
Moon Township, PA 15108-4312
United States
tel: 1-800-525-2000
www.EatonElectrical.com

Supersedes Instruction Leaflet 70-8399
June 2000
Printed in U.S.A.

EATON | Cutler-Hammer

© 2006 Eaton Corporation
All Rights Reserved
Printed in USA
Publication No. IL00300001Y / Z4476
June 2006

GSW WATER HEATING
A GSW Inc. Company
599 Hill Street West
Fergus, ON, Canada N1M 2X1

JW John Wood

ELECTRIC WATER HEATER
INSTALLATION AND OPERATING INSTRUCTIONS

Read these instructions thoroughly before starting

TABLE OF CONTENTS

I) Water Pipe Connections 1
II) Power Supply \ Wiring 1
III) Filling & Draining Tank.....2
IV) Installation Checklist 2
V) Temperature Adjustment 2
VI) Service And Maintenance .....2 to 3
VII) Trouble-Shooting 3
VIII) Pressure Buildup (Thermal Expansion) 4
IX) Warranty 5

PLEASE RETAIN THESE INSTRUCTIONS IN A SAFE LOCATION FOR FUTURE REFERENCE

⚠ FOR YOUR SAFETY

- **Do not store or use gasoline or other flammable vapours and liquids in the vicinity of this or any other appliance.**
- **Installation and service must be performed by a qualified installer, service agency or the electric utility.**

⚠WARNING: Improper installation, adjustment, alteration, service, or maintenance can cause injury or property damage. Refer to this manual. For assistance or additional information, consult a qualified installer, service agency, or the electric utility.

⚠WARNING: If the information in these instructions is not followed exactly, a fire or explosion may result causing property damage, personal injury or death.

IF YOU HAVE ANY INSTALLATION, PERFORMANCE OR OPERATIONAL QUESTIONS PLEASE CALL THE FOLLOWING NUMBER, PRIOR TO REMOVING THE WATER HEATER
(if this is a rental water heater please contact the rental company)

1-888-GSW-TECH
1-888-479-8324

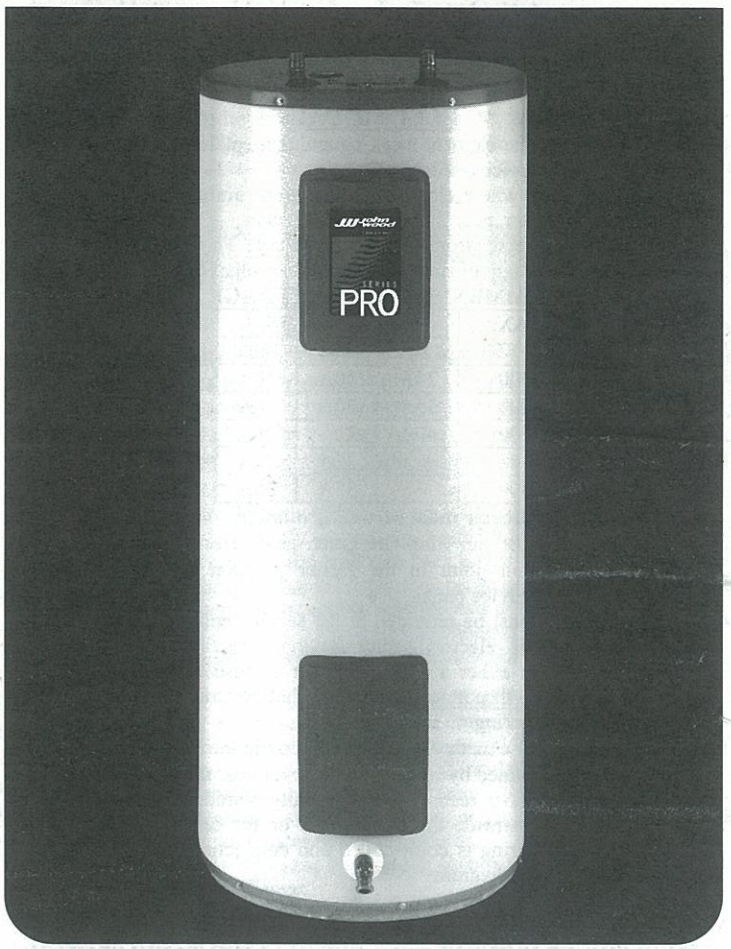

INSTALLATION RECORD

This water heater is protected by a multi-year warranty against leaks plus a one (1) year warranty on parts.
Record key data here for future reference and prompt service:

Installed By / Purchased From:		
Installation Date:	Location of Electrical Switch or Circuit Protector:	
Model Number	Serial Number	
Watts	Watts	Watts-Total
Volts	P.S.I.	U.S. Gal.

PART NO. 61515 REV. C (03-01)

ANODE INSPECTION / CHANGE

1. Turn the electrical supply to the water heater "OFF".
2. Close the cold inlet supply valve.
3. Open a hot water tap supplied by the heater. (CAUTION: Water will be hot).
4. See **'Draining Tank'** section to remove enough water to empty the piping system.
5. Using a 1 $^{1}/_{16}$" socket, remove anode and inspect or replace as required.
6. To refill the heater, see **'Filling Tank'** section.

WARNING **Operating a water heater without an actively working anode rod will void the warranty.**

TANK CLEAN-OUT

1. A clean-out opening is provided on certain models for periodic cleaning of the tank. Power supply must be shut off and the heater drained before opening the clean-out.
2. To clean heater through the clean-out opening, proceed as follows:
   a) Remove outer door from side of the casing.
   b) Peel back the insulation covering the clean-out flange.
   c) Remove the six (6) hex head screws securing the tank clean-out plate and remove the plate.
   d) Remove lime, scale or sediment using care not to damage the glass lining of the tank.
   e) Inspect the clean-out gasket, if it shows signs of wear, a new gasket is required.
   f) Install the clean-out plate. Be sure to draw plate up tight by tightening screws securely.
   g) Position the insulation, and replace the door.

TROUBLE-SHOOTING

Follow the preceding instructions carefully and your heater should provide long and trouble free service. If problems do arise however, the following will be of assistance.

NOT ENOUGH OR NO HOT WATER

1. Make sure the electrical supply to the water heater is "ON".
2. Check for loose or blown fuses and loose connections in the water heater circuit.
3. If the water was too hot and is now cold, the high limit temperature switch may have operated. To reset this, proceed as follows:
   a) Turn the electrical supply to the water heater "OFF".
   b) Remove the access door then turn back the insulation.
   c) Reset the control by pushing in the red button marked 'RESET'.
   d) Repack the insulation then replace access door.
   e) Turn the electrical supply to the water heater "ON".
4. The capacity of the tank may have been exceeded by large demands of hot water. Wait at least one hour then check for hot water at normal hot water faucet.
5. The incoming cold water may be colder because it is winter. If so, it will take longer to heat the water.
6. If none of the above result in adequate hot water, call a service person.
7. If there is no HOT water, check the upper element.
8. If there is limited HOT water, check the lower element.
9. If water is LUKEWARM check for proper incoming voltage.

WATER LEAKAGE IS SUSPECTED

1. Check all pipes and fittings for leaks, including the drain valve, element(s) and relief valve.
2. See if the apparent leakage might be condensation. In warm or humid locations, condensation can accumulate and run from the heater and piping.
3. If leakage is from the relief valve discharge pipe, it may represent a normal condition. Call a service person to check the valve carefully.
4. If you cannot identify or correct the source of leakage:
   a) Turn off electrical supply to he heater.
   b) Close the cold water inlet valve to the heater.
   c) Open a hot water faucet.
   d) Contact a qualified plumber or service person.

WATER IS TOO HOT

Adjust the thermostats to a lower setting. See **'Temperature Adjustment'** section. It is imperative that the thermostat is flush against the tank. See **'Thermostat Replacement'** section.

HOT WATER ODOUR

On occasion, and depending on your location, hot water may develop a strong odour. This can be especially problematic in regions where the water contains some sulphur, which results in hot water having a "rotten egg" smell. If this occurs, drain the system completely, flush thoroughly and refill. If the problem persists, the anode rod may need to be changed from magnesium to one made of aluminum. In certain cases chlorinating and flushing of the water heater may be required. Contact your dealer or water supplier.

DISCOLORED WATER

- Water rich in iron or other minerals can produce red or brown staining. Heating water generally worsens this situation.
- Black water can be an indication of organic contaminates in the water supply. This can be problematic in areas where the water is obtained from surface or contaminated sources. Organic particles can develop bacterial growth, causing potential health hazards. Contact your water supplier for proper filtration or water conditioning equipment. For bacterial problems contact your local health authority. Also see **'Hot Water Odour'** section.
- A sudden appearance of rusty water can indicate the anode rod has been depleted. The remaining steel core wire may be corroding, releasing iron particles into the water. Inspect and replace as necessary. Also see **'Cathodic Protection: Anode Maintenance'** section.

WATER HEATER MAKES NOISE

Sediment, sand or scale can accumulate resulting in "rumbling" or a "hissing" noise. Water heaters need to be flushed regularly to minimize buildup. Severe accumulations can cause premature failure of the water heater elements.

EXTENDED NON USE SERVICE

CAUTION Hydrogen gas is produced in a hot water system served by this heater that has not been used for a long period of time (generally two (2) weeks or more). Hydrogen gas is extremely flammable. To reduce the risk of injury under these conditions, it is recommended that the hot water faucet be opened for several minutes at the kitchen sink before using any electrical appliance connected to the hot water system. Use caution in opening faucets. When hydrogen is present, there will probably be an unusual sound such as air escaping through the pipe as the water begins to flow. There should be no smoking or open flame near the faucet at the time it is open.

PLUMBING

1. The cold water inlet is identified at the top of the heater (unless bottom entry). The hot water connection is also identified at the top of the heater. Install a shut-off valve in the cold line approximately 3' from the inlet to the heater where it is in convenient reach. This valve is for emergency shut-off and **MUST** be kept open during the operation of the heater.
2. All nipples contain a plastic lining to minimize corrosion (cold inlet nipples have double sleeve, hot outlet nipples have a single sleeve). Do not apply heat to these nipples when making solder connections. Sweat a piece of tubing to adapter before fitting adapter to nipple.
3. A combination Temperature and Pressure relief valve **MUST** be installed. In some cases it is necessary that a Tee be fitted in the top of the heater which allows the temperature probe to reach into the top of the tank. See diagram on page 4. No shut-off valve of any kind is permitted between the tank and the relief valve. The outlet of the relief valve must be piped to a drain or fixture, and must terminate within 6" of the floor.

ELECTRICAL

1. Check to see that the element marking and nameplate data do correspond with the electric service available.
   a) The junction box where electrical connections are made is located near the top of the heater, near the upper access door.
2. Install a circuit directly from the main fuse box. This circuit must be the right size for the length of run and the load (see chart below).

RECOMMENDED FOR AMPERAGE

MAX. WATTS	MAX. VOLTS 120V	208V	240V
1500	20A	10A	10A
3000	35A	20A	20A
3500	40A	20A	20A
4500		30A	25A
5500		35A	35A

The heater must be well grounded.

3. A ground wire must run from the green ground screw provided at the electrical connection point in the heater junction box to the ground connection at the service panel.
4. Adequate fusing must be provided at the service entrance as required by local codes and/or electric utility having jurisdiction. This can be accomplished with either a circuit breaker or fuse block in the service panel or a separate disconnect switch, so that electric power can be shut off easily when working on the heater.
5. Final connections are made at the junction box in the heater. Access to the junction box is obtained by removing the cover near the knockouts.
6. The heater you have received is internally wired. A specific wiring diagram is located inside the upper door or for certain models on the rating plate. All wiring is color-coded and connections must be made as shown in the wiring diagram

MAKE SURE HEATER IS COMPLETELY FILLED WITH WATER BEFORE POWER IS TURNED ON. SEE 'FILLING TANK' SECTION.

WIRING

TWO WIRE CIRCUIT FOR NON-SIMULTANEOUS OPERATION.
SINGLE HIGH LIMIT.

The basic operation of a two thermostat system (upper and lower) on a electric water heater of 240 volts is as follows:
Only one element will come on at any one time. This is known as a flip/flop system. On a 240-volt water heater, there will always be 120 volts to both elements. The thermostat will direct the second leg of the 120-volt to the element to complete the 240 volts required for energizing the element.
Initial Start Up: When the tank is full of cold water, the upper thermostat will take priority and the top portion of the water will heat up to the setting of the thermostat. Once that temperature has been reached, the thermostat will then flip down the 120 volts to the lower thermostat. The thermostat switch closes and the bottom portion of the tank heats up until the water reaches the setting on that thermostat. At this point the tank will be full of hot water.
Normal Operation: When hot water is being used, cold water enters the bottom of the heater (either bottom feed or by diptube), and the bottom element will begin to heat the cold water..If lots of hot water has been used, the upper thermostat will take priority and the top portion of the heater will be heated. Once heated, the thermostat will flip down to the lower thermostat to heat the lower portion.

TWO WIRE CIRCUIT FOR SINGLE (1) ELEMENT HEATERS EQUIPPED WITH SINGLE HIGH LIMIT CONTROL. SPACESAVER™ MODELS ONY.

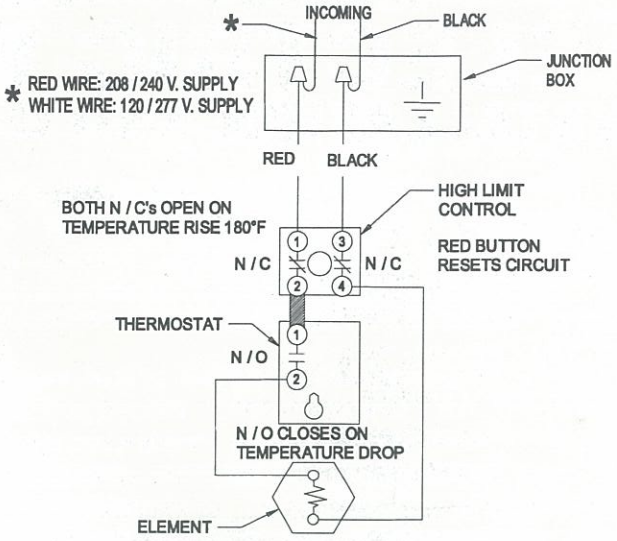

WATER HEATER MUST BE GROUNDED TO THE ELECTRIC SUPPLY SERVICE.

TWO WIRE CIRCUIT FOR TWO (2) ELEMENT HEATERS EQUIPPED WITH SINGLE (1) HIGH LIMIT CONTROL. NON-SIMULTANEOUS OPERATION.

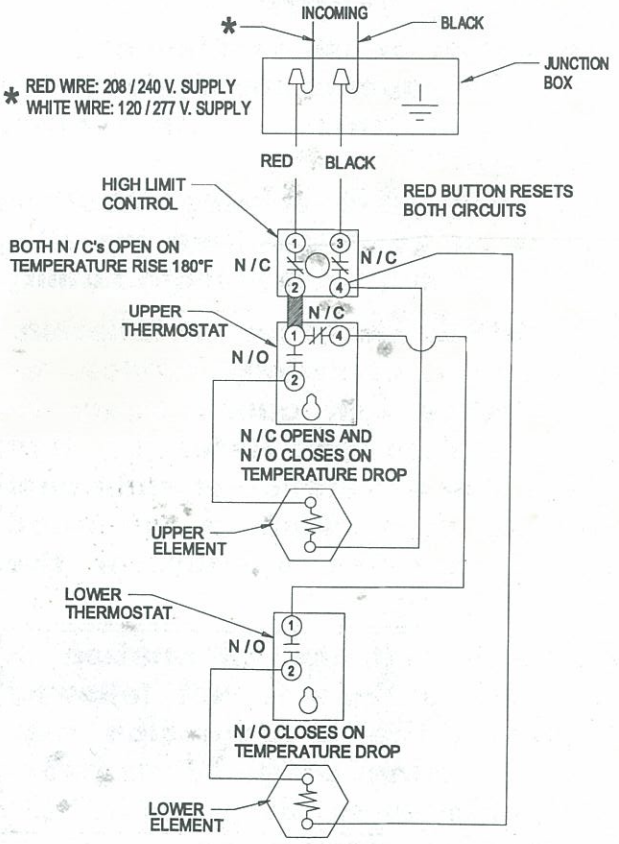

WATER HEATER MUST BE GROUNDED TO THE ELECTRIC SUPPLY SERVICE.

FILLING TANK

1. Close the drain valve, and then open a hot water faucet.
2. Open the cold water supply valve.
3. When water runs out of the hot faucet, the tank is full.
4. Check the system for leaks.

NOTE: When filling, avoid water spillage. Do not allow the insulation of the heater to get wet as water can cause electrical malfunction.

DRAINING TANK (completely)

If the power is to be turned off during the cold season and the tank is exposed to freezing temperatures, the water heater must be drained. Water will expand when it freezes and can damage the heater.

Completely drain as follows:

1. Make sure the electrical supply to the water heater is "OFF".
2. Turn off cold water supply.
3. Connect a garden hose to the end of the drain valve and direct this to a point lower than the heater.
4. Open a hot water faucet.
5. Open the drain valve on the heater – drain, keeping the drain valve open during the shutdown period.
6. To refill the heater, see **'Filling Tank'** section.

INSTALLATION CHECK LIST

	Check Here
1. Are the fuse and wire sizes correct?	
2. Is the certified relief valve installed?	
3. Are you sure that in case of water leakage, the building, furniture, carpeting or other property will not be damaged?	
4. Has the relief valve been piped to a suitable drain point?	
5. Is the relief valve discharge unobstructed?	
6. Is the heater completely filled with water?	
7. Is the cold supply valve open?	

If the answer to the above are yes, turn on the power and enjoy all the hot water you need, all the time.

RELIEF VALVE REQUIREMENTS

CAUTION To reduce the risk of excessive pressures and temperatures in this water heater, install temperature and pressure protective equipment required by local codes. It should be no less than a combination temperature and pressure relief valve certified by a nationally recognized testing laboratory that maintains periodic inspection of production of listed equipment or materials, as meeting the Requirements for Relief Valves and Automatic Gas Shut-off Devices for Hot Water Supply Systems, ANSI Z21.22-latest edition. This valve must be marked with a maximum set pressure not to exceed the marked MAXIMUM working pressure of the water heater (150 PSI). Install the valve into an opening provided and marked for this purpose in the water heater, and orient it or provide tubing so that any discharge from the valve will exit only within 6 inches above, or at any distance below the structural floor and cannot contact any live electrical part. The discharge opening must not be blocked or reduced in size under any circumstances.

The end of the relief pipe opening should terminate near a floor drain or other suitable location not subject to blocking or freezing. DO NOT thread, plug or cap the relief pipe opening.

FAILURE TO INSTALL A LISTED ¾" TEMPERATURE - PRESSURE RELIEF VALVE WILL RELEASE THE MANUFACTURER FROM ANY CLAIM WHICH MIGHT RESULT FROM EXESSIVE TEMPERATURES AND PRESSURES.

TEMPERATURE & PRESSURE RELIEF VALVE

Inspect the relief valve annually to ensure proper operation. This involves opening the valve to check that water is able to flow freely, and that there are no blockages. **Warning: THE WATER WILL BE HOT** and its flow can be forceful. Provide a bucket or drainage for the expelled water. Lift the lever and let it snap shut. The water should stop immediately.

If the valve does not function properly, it **MUST** be replaced. In systems where the relief valve discharges periodically, this may be due to thermal expansion causing pressure build up. See **'Pressure Build-Up (Thermal Expansion'** section.

CAUTION

FOR YOUR SAFETY, BE AWARE THIS WATER HEATER IS CAPABLE OF PRODUCING HOT WATER AT A TEMPERATURE SUFFICIENT ENOUGH TO CAUSE SCALDING INJURY. READ INSTRUCTIONS CAREFULLY BEFORE OPERATING THIS UNIT. INCREASING THE THERMOSTAT SETTING ABOVE THE PRE-SET TEMPERATURE MAY CAUSE SEVERE BURNS AND CONSUME EXCESSIVE ENERGY. HOTTER WATER INCREASES THE RISK OF SCALD INJURY.

150°F (66°C) – 2 SECONDS
140°F (60°C) – 6 SECONDS
130°F (54°C) – 30 SECONDS

TEMPERATURE ADJUSTMENT

In order to reduce the risk of scald injury, thermostats are factory set at 120°F (49°C). The thermostats operate automatically. They can be adjusted to provide warmer or cooler water temperature. The setting of 120°F (49°C) has been proven to be most satisfactory from the standpoint of operational costs and safety. We recommend you keep the thermostats adjusted to 120°F (49°C). If adjustments are made set both thermostats to the SAME setting (if applicable).

TEMPERATURE LIMIT CONTROL

For safety, a non-adjustable high limit temperature switch will shut off the power when excessive water temperatures are reached. This switch must be re-set manually. See **'Trouble-Shooting'** section.

WARNING **BEFORE ATTEMPTING ANY ELECTRICAL REPAIRS OR REPLACEMENTS, TURN OFF POWER TO THE WATER HEATER. CHECK WITH A VOLTAGE TESTER AT TERMINAL 1 AND 3 OF THE LIMIT CONTROL THAT POWER IS INDEED OFF. FAILURE TO DO SO MAY RESULT IN ELECTRIC SHOCK AND/OR ELECTROCUTION OF THE PERSON DOING THE WORK.**

If water temperature adjustment is required:

1. Turn the electrical supply to the water heater "OFF".
2. Remove the access door(s), and turn back insulation.
3. Adjust the thermostat(s) to the water temperature desired (if a two-thermostat system exists, set both thermostats at the same temperature).
4. Repack the insulation and replace access door(s).
5. Turn the electrical supply to the water heater "ON".

ELEMENT REPLACEMENT

1. See **'Draining Tank'** section to remove water from the heater.
2. Turn the electrical supply to the water heater "OFF".
3. Remove the access door(s), and turn back insulation.
4. Disconnect wires from heating element terminals.
5. Unscrew the element using a 1½" socket wrench or tool number S1008, available from your water heater distributor.
6. Replace element with new one, taking care that sealing gasket is in the groove of element flange.
7. Re-connect wiring, and replace Di-Electric shields.
8. Repack insulation over thermostat(s), and replace access door(s).
9. Fill tank with water **BEFORE** turning **ELECTRICITY** on. See **'Filling Tank'** section.

THERMOSTAT REPLACEMENT

1. Turn the electrical supply to the water heater "OFF".
2. Remove the access door(s), and turn back insulation.
3. Disconnect wires from thermostat(s).
4. Lift prongs off bracket and slide thermostat up and out.
5. Replace in reverse order, taking care that thermostat(s) is **flush against the tank**.
6. Repack insulation over thermostat(s), and replace access door(s).
7. Turn the electrical supply to the water heater "ON".

CATHODIC PROTECTION: ANODE MAINTENANCE

Your water heater has been supplied with an anode rod that protects the tank from corrosion. As the rod works, it slowly dissolves over time and must be replaced. If the anode is less than 3/8" diameter, or any exposed bare core, replace. Depending on water conditions, an anode can last from one to ten years. Many localities treat their water, which can have significant effect on the life of your heater. Water conditioning such as over softening can accelerate the rate at which the anode rod is consumed. Rapid depletion can leave a heater unprotected causing a premature failure. As with any water heater, it is good practice to check the anode annually to see if it needs replacing.

ANODE INSPECTION / CHANGE

1. Turn the electrical supply to the water heater "OFF".
2. Close the cold inlet supply valve.
3. Open a hot water tap supplied by the heater. (CAUTION: Water will be hot).
4. See **'Draining Tank'** section to remove enough water to empty the piping system.
5. Using a 1 $^{1}/_{16}$" socket, remove anode and inspect or replace as required.
6. To refill the heater, see **'Filling Tank'** section.

WARNING Operating a water heater without an actively working anode rod will void the warranty.

TANK CLEAN-OUT

1. A clean-out opening is provided on certain models for periodic cleaning of the tank. Power supply must be shut off and the heater drained before opening the clean-out.
2. To clean heater through the clean-out opening, proceed as follows:
   a) Remove outer door from side of the casing.
   b) Peel back the insulation covering the clean-out flange.
   c) Remove the six (6) hex head screws securing the tank clean-out plate and remove the plate.
   d) Remove lime, scale or sediment using care not to damage the glass lining of the tank.
   e) Inspect the clean-out gasket, if it shows signs of wear, a new gasket is required.
   f) Install the clean-out plate. Be sure to draw plate up tight by tightening screws securely.
   g) Position the insulation, and replace the door.

TROUBLE-SHOOTING

Follow the preceding instructions carefully and your heater should provide long and trouble free service. If problems do arise however, the following will be of assistance.

NOT ENOUGH OR NO HOT WATER

1. Make sure the electrical supply to the water heater is "ON".
2. Check for loose or blown fuses and loose connections in the water heater circuit.
3. If the water was too hot and is now cold, the high limit temperature switch may have operated. To reset this, proceed as follows:
   a) Turn the electrical supply to the water heater "OFF".
   b) Remove the access door then turn back the insulation.
   c) Reset the control by pushing in the red button marked 'RESET'.
   d) Repack the insulation then replace access door.
   e) Turn the electrical supply to the water heater "ON".
4. The capacity of the tank may have been exceeded by large demands of hot water. Wait at least one hour then check for hot water at normal hot water faucet.
5. The incoming cold water may be colder because it is winter. If so, it will take longer to heat the water.
6. If none of the above result in adequate hot water, call a service person.
7. If there is no HOT water, check the upper element.
8. If there is limited HOT water, check the lower element.
9. If water is LUKEWARM check for proper incoming voltage.

WATER LEAKAGE IS SUSPECTED

1. Check all pipes and fittings for leaks, including the drain valve, element(s) and relief valve.
2. See if the apparent leakage might be condensation. In warm or humid locations, condensation can accumulate and run from the heater and piping.
3. If leakage is from the relief valve discharge pipe, it may represent a normal condition. Call a service person to check the valve carefully.
4. If you cannot identify or correct the source of leakage:
   a) Turn off electrical supply to he heater.
   b) Close the cold water inlet valve to the heater.
   c) Open a hot water faucet.
   d) Contact a qualified plumber or service person.

WATER IS TOO HOT

Adjust the thermostats to a lower setting. See **'Temperature Adjustment'** section. It is imperative that the thermostat is flush against the tank. See **'Thermostat Replacement'** section.

HOT WATER ODOUR

On occasion, and depending on your location, hot water may develop a strong odour. This can be especially problematic in regions where the water contains some sulphur, which results in hot water having a "rotten egg" smell. If this occurs, drain the system completely, flush thoroughly and refill. If the problem persists, the anode rod may need to be changed from magnesium to one made of aluminum. In certain cases chlorinating and flushing of the water heater may be required. Contact your dealer or water supplier.

DISCOLORED WATER

- Water rich in iron or other minerals can produce red or brown staining. Heating water generally worsens this situation.
- Black water can be an indication of organic contaminates in the water supply. This can be problematic in areas where the water is obtained from surface or contaminated sources. Organic particles can develop bacterial growth, causing potential health hazards. Contact your water supplier for proper filtration or water conditioning equipment. For bacterial problems contact your local health authority. Also see **'Hot Water Odour'** section.
- A sudden appearance of rusty water can indicate the anode rod has been depleted. The remaining steel core wire may be corroding, releasing iron particles into the water. Inspect and replace as necessary. Also see **'Cathodic Protection: Anode Maintenance'** section.

WATER HEATER MAKES NOISE

Sediment, sand or scale can accumulate resulting in "rumbling" or a "hissing" noise. Water heaters need to be flushed regularly to minimize buildup. Severe accumulations can cause premature failure of the water heater elements.

EXTENDED NON USE SERVICE

CAUTION Hydrogen gas is produced in a hot water system served by this heater that has not been used for a long period of time (generally two (2) weeks or more). Hydrogen gas is extremely flammable. To reduce the risk of injury under these conditions, it is recommended that the hot water faucet be opened for several minutes at the kitchen sink before using any electrical appliance connected to the hot water system. Use caution in opening faucets. When hydrogen is present, there will probably be an unusual sound such as air escaping through the pipe as the water begins to flow. There should be no smoking or open flame near the faucet at the time it is open.

PRESSURE BUILD-UP (THERMAL EXPANSION)

During the heating cycle of the water heater, the water expands creating a pressure build-up in the plumbing system. If the pressure exceeds 150 PSI, water will come out of the valve. This is a normal safety function of the T&P valve. The water supply meter may have a check valve or back flow preventer inside. This can increase the possibility of pressure build-up. Causes of discharge can be thermal expansion, excess system pressure, too high a temperature setting on the thermostat or something in the water heater causing excess temperatures in the heater.

Thermal Expansion: When water is heated it expands. For example, in a 40-gallon water heater, water being heated to its thermostat setting will end up expanding by approximately 1/2 gallon. This extra volume created by the expansion has to go somewhere or pressure will dramatically increase, such as when water is heated in a closed system. A good indication of thermal expansion is when the T&P valve releases about one cup of water for every 10 gallons of heater capacity with each heating cycle. The T&P valve is functioning properly when it relieves pressure caused by thermal expansion, but frequent relief can result in a build up of natural mineral deposits on the valve seat, rendering the valve inoperative. Should this happen, the T&P valve needs to be replaced.

To prevent this 'T & P VALVE' from discharging hot water, the loss of energy and reduce the possible build-up of lime in the 'T & P VALVE' there are two (2) recommendations:

OPTION 1: Install a 125 PSI Pressure Relief (only) valve in the cold water supply line. Make sure that the discharge of this valve is directed to a drain to prevent water damage and it is protected from freezing,

OR

OPTION 2: Install an expansion tank on the cold water supply line. For every 50 U.S. gallons of stored water, the expansion tank must have a minimum capacity of 1.5 U.S. gallons.

Temperature Relief: The T&P valve will discharge varying amounts of water, but typically more than you would experience from thermal expansion. Check the temperature in relation to the setting on the thermostat dial. A malfunctioning thermostat could cause the water to get too hot.

Alternate location of pressure relief valve

OPTION 2

Location of pressure relief and \ or expansion tank if a check valve or pressure reducing valve is in the cold water supply to the house.

Use option 1 or 2 as convenient. If a pressure relief valve is used (OPTION 1) select one with a setting 25 psi below the relief valve rating used on the heater.

OPTION 1

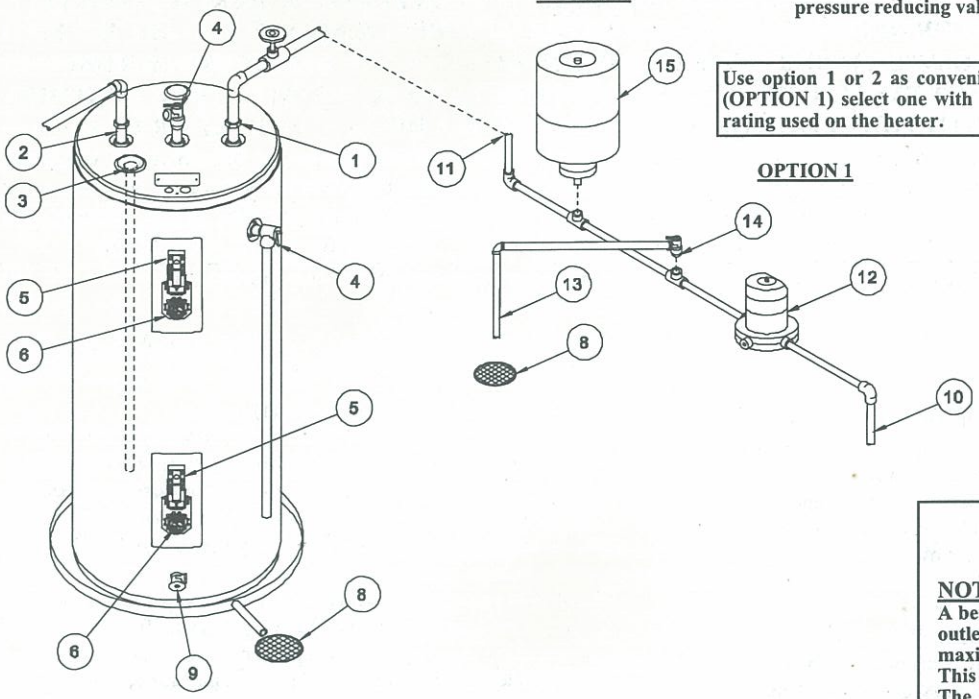

1. Cold water inlet
2. Hot water outlet
3. Anode(s)
4. Temperature and pressure relief valve*
5. Thermostat
6. Element
7. Access door – not illustrated
8. Floor drain
9. Drain valve
10. Water supply to meter
11. Water supply to home
12. Water meter with backflow preventer
13. Overflow
14. Pressure relief valve
15. Expansion tank

*Items to be supplied by installer

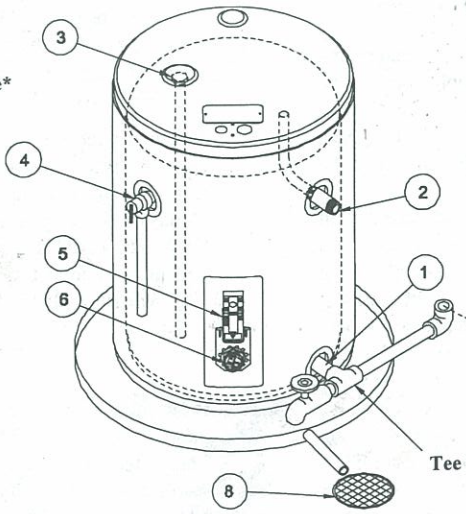

Refer to pressure relief \ expansion tank schematic above.

Tee fitting and drain valve

SPACESAVER™ MODELS (SIDE OUTLET) ONLY

NOTE TO INSTALLERS:

A bent tube (as shown) is installed for the hot water outlet on side outlet water heaters to ensure a maximum of hot water supply.
This fitting must be aligned properly.
The 'line' on the fitting must be oriented pointing up. When in correct position, the hot water is drawn from the highest point in the tank.

~ *Certificate of Warranty* ~

Warranty Code:	P	R	S	T	U	V	W	Y
Standard Warranty Years:	3	5	6	7	8	9	10	12
Reduced Warranty Years:	2	3	3	5	5	5	5	7

See Rating Label Serial Number prefix for Warranty Code. Reduced warranty period applies to Newfoundland.

For its GSW and John Wood water heaters and storage boosters ("Unit"), GSW Water Heating ("GSW") warrants that, upon receipt of a properly verified Warranty claim within the Warranty Period, it will, at its election, repair or replace: units.which leak; parts which are defective in material or workmanship, subject to the terms and conditions set forth in this certificate. GSW Units/parts must be replaced with GSW or John Wood product to be eligible for Warranty. This Warranty is available to the original owner for a Unit installed within the boundaries of continental United States, Canada, or their territories. **Consumers must retain point of sale proof of purchase to validate warranty entitlement.** This Warranty does not cover components not manufactured by GSW, such as oil burners, which carry the warranty given by the manufacturer thereof, which warranty GSW will make available, to the extent permitted by the manufacturer, without recourse to GSW.

THERE ARE NO WARRANTIES WHICH EXTEND BEYOND THE DESCRIPTION ON THE FACE HEREOF. THIS EXPRESS WARRANTY IS, WHERE PERMITTED BY LAW, IN LIEU OF AND EXCLUDES AND REPLACES ALL OTHER CONDITIONS, WARRANTIES, GUARANTEES, REPRESENTATIONS, OBLIGATIONS OR LIABILITIES OF GSW OF ANY NATURE OR KIND, EXPRESS OR IMPLIED, HOWEVER ARISING (WHETHER BY CONTRACT, CONDUCT, STATEMENT, STATUTE, NEGLIGENCE, PRINCIPLES OF MANUFACTURER'S LIABILITY, OPERATION OF LAW OR OTHERWISE) WITH RESPECT TO THE UNIT OR ITS FITNESS FOR A PARTICULAR PURPOSE, MERCHANTABILITY, INSTALLATION, OPERATION, REPAIR OR REPLACEMENT. GSW EXPRESSLY DISCLAIMS ANY AND ALL IMPLIED WARRANTIES. IN NO EVENT WILL GSW'S LIABILITIES EXCEED THE COST OF THE DEFECTIVE PART(S) NOR LEAKING INNER TANK. GSW WILL NOT PAY FOR ANY TRANSPORTATION, LABOUR, INSTALLATION, OR OTHER INCIDENTAL COSTS ASSOCIATED WITH THE REPAIR OR REPLACEMENT OF A DEFECTIVE PART OR HEATER.

This warranty and GSW's obligations shall be construed and determined in accordance with the laws of both the Province of Ontario, and of Canada in force therein. This Warranty does not affect specific legal rights of a consumer under applicable law, except to the extent that such rights may be waived or replaced, and the provisions hereof are deemed to be amended to the extent necessary. The unenforceability of any provision of this Warranty shall not affect the remaining provisions. Any and all repair and/or replacement of part(s) or Unit are the sole and exclusive remedy available against GSW.

LIABILITY OF GSW COVERED BY THIS WARRANTY IS CONDITIONAL UPON THE FOLLOWING:

1. The Unit shall be installed in accordance with all manufacturers' instructions, all applicable equipment and building codes, ordinances and regulations.
2. The Unit must not be installed where water damage can result from a leak, while provision(s) shall be made for directing any water escaping from the Unit, to a drainpipe. As all Units may eventually leak, you must protect against any potential water damage. GSW accepts no responsibility for such damage, nor any incidental or consequential loss, nor damage(s) related thereto, suffered by the owner of the unit nor by any third party.
3. The Unit shall not be installed where it will be exposed to adverse or unusual environmental or corrosive conditions. For example, no warranty extends to Units exposed to: salt; chemicals; exhausts; pollutants or contaminants. Further, no warranty extends to Units affected by fire, freezing or flood, "Acts of God", nor any other contingency beyond the control of GSW.
4. The Unit shall be equipped with a properly operating temperature and pressure relief valve as specified by GSW and applicable codes. The Unit shall be operated at temperatures not exceeding the maximum setting of the thermostat and/or high limit control provided by GSW, and at water pressures not exceeding the pressure reading shown on the Unit.
5. The Unit must be carefully inspected, maintained, and operated in accordance with the manufacturer's instructions. For example, no warranty extends to any Unit operated: without the tank being completely filled with water; without an operating anode; with levels of sediment or lime precipitate which cause failure; in connection to any attachment(s), energy saving device(s), or other means of heating except as approved by GSW for the Unit; other than with potable water without any additives such as salt, chlorine or chemicals, except those added for the sole purpose of rendering the water fit for domestic use.
6. All repairs must be made by qualified personnel who are certified to work on the Unit, using factory approved replacement parts, and the Unit shall not be otherwise modified, altered or improperly repaired. GSW will not assume any expense or liability for unauthorized returns, nor repairs made by unqualified personnel who are not certified to work on the Unit.
7. A properly documented claim shall be received by GSW or one of its authorized dealers, or point of purchase:
   a) for any defective part within one (1) year; and
   b) unless otherwise specified below *, for any leaks that may occur in the Unit's inner tank due to rust, corrosion or other chemical reactions caused by the domestic water supplied to your home, within the period of time shown in table;

   *The following are the modified Warranty Periods applicable to leaks in inner tanks:

   *Residential units installed and used in a commercial application carry a reduced warranty period of one (1) year from date of installation. Any repair or replacement of any part, tank, or Unit under this Warranty will not extend the Warranty Period beyond that calculated from the date of first installation of the original Unit. The date of first installation will be deemed to be the later of the date indicated by the Unit's serial number, or if supplied with the Warranty claim, the sales receipt, or installer's receipt.
8. A claim under this Warranty including the model and serial number of the Unit, proof of date on which the Unit was first installed, and the identity of the defective part(s) for which a claim is being made within 15 days, following discovery of the defect(s), by personal delivery to a GSW authorized dealer, point of purchase, or contact GSW itself at: Technical Support Line **1-800-447-6575 ext 2**

   Address: GSW Water Heating
   A GSW Inc. Company
   599 Hill Street West
   Fergus, ON Canada N1M 2X1
9. If requested by GSW, information relating to the purchase, transportation operation and installation of the Unit shall be supplied. The defective part(s) or Unit, with all components properly and securely packed, shall be returned transportation pre-paid, to the address designated by GSW in the request.

   All claims are subject to validation by GSW.

Isotope Van Mount Locations

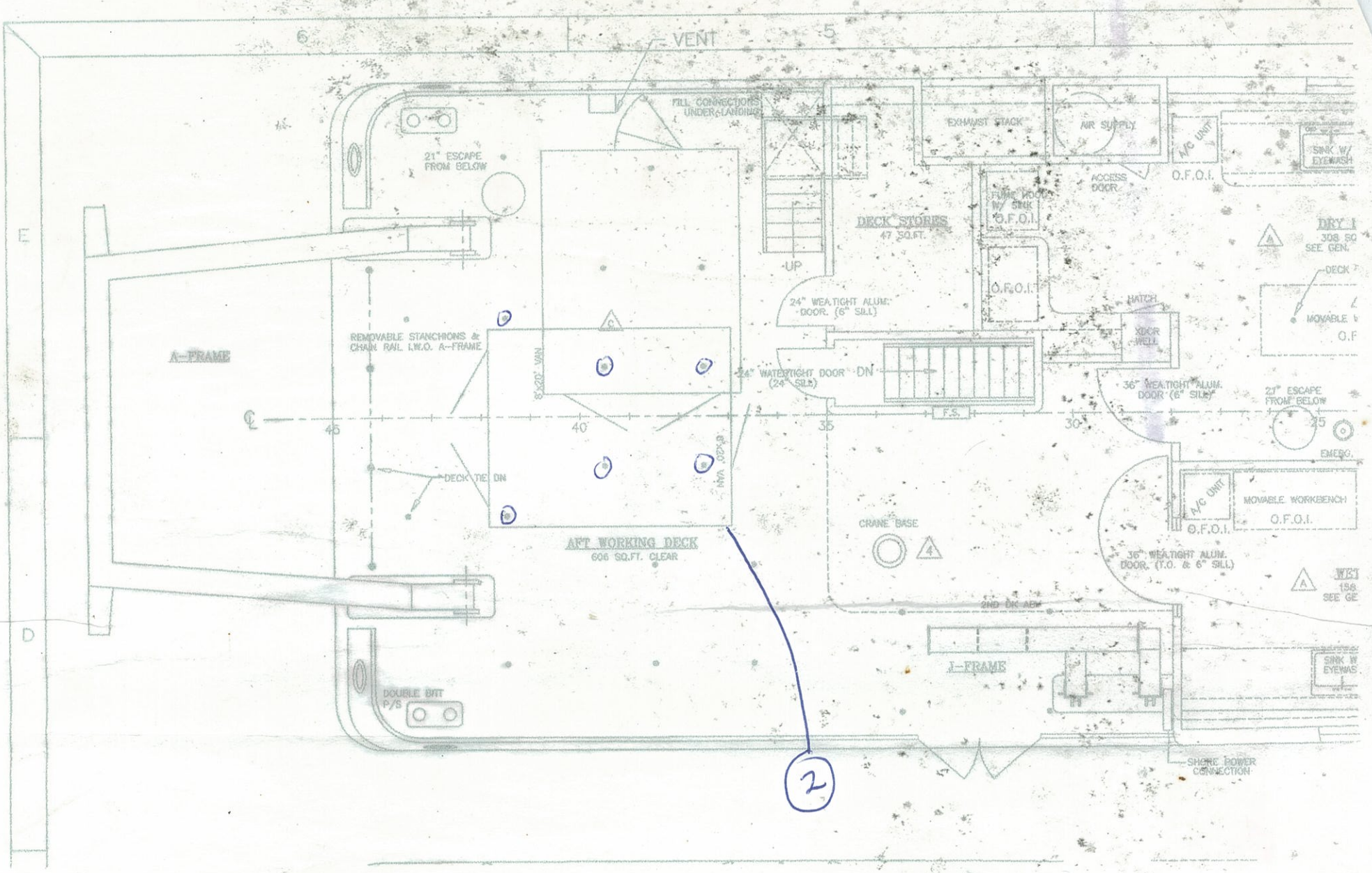

POTENTIAL HAZARDS

HEALTH

- Radiation presents minimal risk to transport workers, emergency response personnel and the public during transportation accidents. Packaging durability increases as potential hazard of radioactive content increases.
- Very low levels of contained radioactive materials and low radiation levels outside packages result in low risks to people. Damaged packages may release measurable amounts of radioactive material, but the resulting risks are expected to be low.
- Some radioactive materials cannot be detected by commonly available instruments.
- Packages do not have RADIOACTIVE I, II, or III labels. Some may have EMPTY labels or may have the word "Radioactive" in the package marking.

FIRE OR EXPLOSION

- Some of these materials may burn, but most do not ignite readily.
- Many have cardboard outer packaging; content (physically large or small) can be of many different physical forms.
- Radioactivity does not change flammability or other properties of materials.

PUBLIC SAFETY

- **CALL Emergency Response Telephone Number on Shipping Paper first. If Shipping Paper not available or no answer, refer to appropriate telephone number listed on the inside back cover.**
- **Priorities for rescue, life-saving, first aid, fire control and other hazards are higher than the priority for measuring radiation levels.**
- Radiation Authority must be notified of accident conditions. Radiation Authority is usually responsible for decisions about radiological consequences and closure of emergencies.
- As an immediate precautionary measure, isolate spill or leak area for at least 25 meters (75 feet) in all directions.
- Stay upwind.
- Keep unauthorized personnel away.
- Detain or isolate uninjured persons or equipment suspected to be contaminated; delay decontamination and cleanup until instructions are received from Radiation Authority.

PROTECTIVE CLOTHING

- Positive pressure self-contained breathing apparatus (SCBA) and structural firefighters' protective clothing will provide adequate protection.

EVACUATION

Large Spill

- Consider initial downwind evacuation for at least 100 meters (330 feet).

Fire

- When a large quantity of this material is involved in a major fire, consider an initial evacuation distance of 300 meters (1000 feet) in all directions.

EMERGENCY RESPONSE

FIRE

- Presence of radioactive material will not influence the fire control processes and should not influence selection of techniques.
- Move containers from fire area if you can do it without risk.
- Do not move damaged packages; move undamaged packages out of fire zone.

Small Fires

- Dry chemical, CO_2, water spray or regular foam.

Large Fires

- Water spray, fog (flooding amounts).

SPILL OR LEAK

- Do not touch damaged packages or spilled material.
- Cover liquid spill with sand, earth or other non-combustible absorbent material.
- Cover powder spill with plastic sheet or tarp to minimize spreading.

FIRST AID

- Medical problems take priority over radiological concerns.
- Use first aid treatment according to the nature of the injury.
- Do not delay care and transport of a seriously injured person.
- Give artificial respiration if victim is not breathing.
- Administer oxygen if breathing is difficult.
- In case of contact with substance, immediately flush skin or eyes with running water for at least 20 minutes.
- Injured persons contaminated by contact with released material are not a serious hazard to health care personnel, equipment or facilities.
- Ensure that medical personnel are aware of the material(s) involved, take precautions to protect themselves and prevent spread of contamination.

Subject: K08A00A-1GA
From: "Paul Green" <paul@tandemloc.com>
Date: Tue, 12 Apr 2005 15:58:45 -0400
To: <travis@SKIO.PEACHNET.EDU>

These items are priced at $254.88 each FOB Havelock, NC 28532. Description at:
http://www.tandemloc.com/0_securing/S_K08A00A-1GA.asp

Paul Green

800 258-7324 ext. 227

Item	Part Name
1	Body
2	Plug
3	Bonnet
4	Handle
5	Seat
6	Spacer (3)
7A	O Ring #222
7B	Back Up Ring #BU222
8	Machine Screw 10-24 x 1 5/8 (3)
9	Nut 10-24 (3)
10	Machine Screw 1/4-20 x 1/2
11	White Plug
12	Stop Ring
13	O Ring #112
14	Base Mount
15	Machine Screw 1/4-20 x 1/2 TH

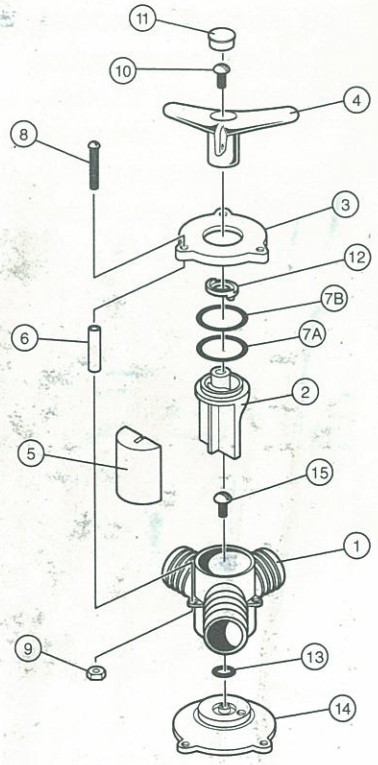

Cat. No.

BM95

Sea-Lect®
1 1/2" Y-valve
Base Mount

Diagram Same
For Catalog
No. BM95T

The Bosworth Company
930 Waterman Avenue
East Providence, RI 02914
(401) 438-1110
(888) 438-1110
FAX (401) 438-2713

To disassemble and lubricate Sea–Lect® Y-valves

- Before disassembly, use a marking pen to draw a witness line on the hose and on the bonnet. This is essential to assure proper alignment when reassembling the valve.
- Loosen and remove all three screws, nuts and spacers.
- Leave the handle attached.
- When all the screws are removed from the valve, pull up on the handle with a twisting motion. This will remove the seat and O ring from the body.
- Check inside the body, clean if necessary.
- Remove the white plug covering the screw inside the handle.
- Remove the screw holding the handle to the plug.
- Remove the handle and stop ring from the plug.

- Using the lubricant provided, grease the inside of the body completely.
- Grease the seat and O ring.
- Reassemble the plug, seat, O ring and stop ring into the body.
- Using the handle, push down on the plug to be sure the seat and O ring are all the way down inside the body.
- Be sure the stop ring is flush with the top of the plug and the bonnet is sitting properly and aligned with the witness mark on the hose.
- Next replace all the screws, spacers and nuts. Be sure not to overtighten the nuts.
- Replace the handle.
- As a lubricating grease, Dow Corning Silicone Grease #44 is recommended.